B

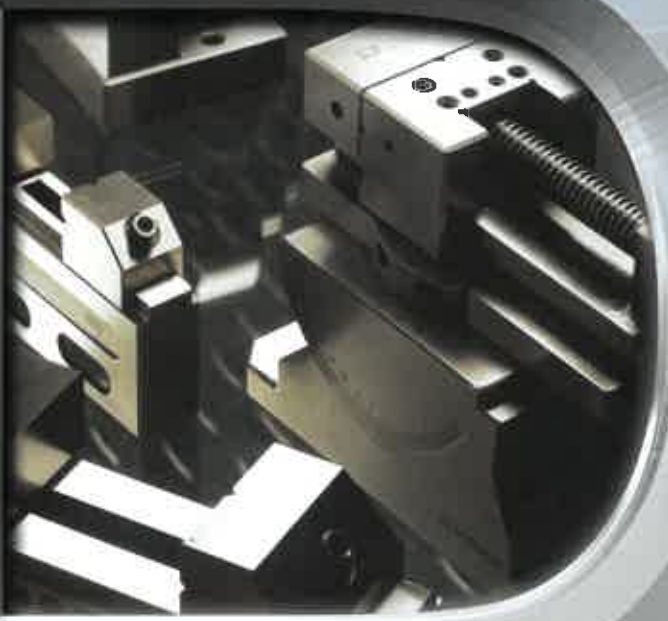

GRINDING MACHINE

ACCESSORIES

B1~B8	PUNCH FORMER / GRINDER
B9~B16	TOOL MAKER VISE / SINE VISE / SINE BAR / ANGLE CHUCK
B17~B21	EDM TOOL MAKER VISE (STAINLESS)
B22	EDM WIRE (BRASS & COPPER)
B23	WIRE DIES GUIDE
B24	ELECTRODE (COPPER & BRASS)
B25	ANGLE PALTE
B26~B27	V-BLOCK / ANGLE PLATE
B28	HARDENED STEEL SQUARE
B29-B30	V-BLOCK
B31~B35	GRINDER WHEEL DRESSER SERIES
B35~36	WHEEL HANGER / GRINDING WHEEL FLANGE / WHEEL BALANCING STAND / DRIVING CARRIER
B37~B44	SINE PLATE / MAGNETIC PLATE / STANDARD POLE ELECTRO MAGNETIC CHUCK / CHUCK CONTROLLER / VARIABLE SPEED ROTARY MAGNETIC CHUCK
B45~B46	MAGNETIC TRANSISTING BLOCK / MAGNETIC ADJUSTALE LINK / MAGNETIC STEEL SEPARATOR / MAGNETIC CHIP COLLECTER / MAGNETIC SEPARATING BAR UNIT
B47~B48	PERMANENT-ELECTRO MAGNETIC CHUCK
B49~50	PERMANENT MAGNETIC LIFTER
B51~B54	MAGNETIC LIFTER / DEMAGNETIZER SERIES CHIP COLLECTOR SERIES
B55~B56	MAGNETIC V~BLOCK SERIES
B57~B62	MAGNETIC TOOLS SERIES
B63~B64	MAGNET SERIES
B65	MULTI-FUNCTION MIST COOLANT SYSTEM / MIST COOLANT WITH MAGNETIC BASE
B66~B70	ADJUSTABLE COOLANT HOSES SERIES
B71~B72	PAPER FILTER SERIES
B73	COLLANT TANK SERIES
B74	OIL SKIMMER SERIES
B75~B76	GAUGE BLOCK SERIES
B77~B78	SURFACE PLATE / STAND SERIES
B79~B82	GRANITE RULERS SERIES / GRANITE V~BLOCK / HORIZONTAL LEVELING INSTRUMENT / PRECISION SQUARE LEVEL / GRANITE SURFACE STAND / CYLINDRICAL SQUARE STEEL / CLEANING PAPER / CONCENTRIC TEST STAND / PIN GAUGE /TESTER ARM BASE
B83~B84	MEASURING INSTRUMENT SERIES
B85	ANGLE LEVEL SERIES
B86	HARDNESS TESTER / STAINLESS STEEL RULER
B87	THREAD SIZE & DEPTH GAUGE / PLUG GAUGE / RING GAUGE

Punch Former

ORDER NO. V-PB
CODE NO. 2001-001

MAX. Wheel D. Ø200mm
Roller Center H. 80mm WEIGHT:10KGS
Head Slide Movement, 12.5mm

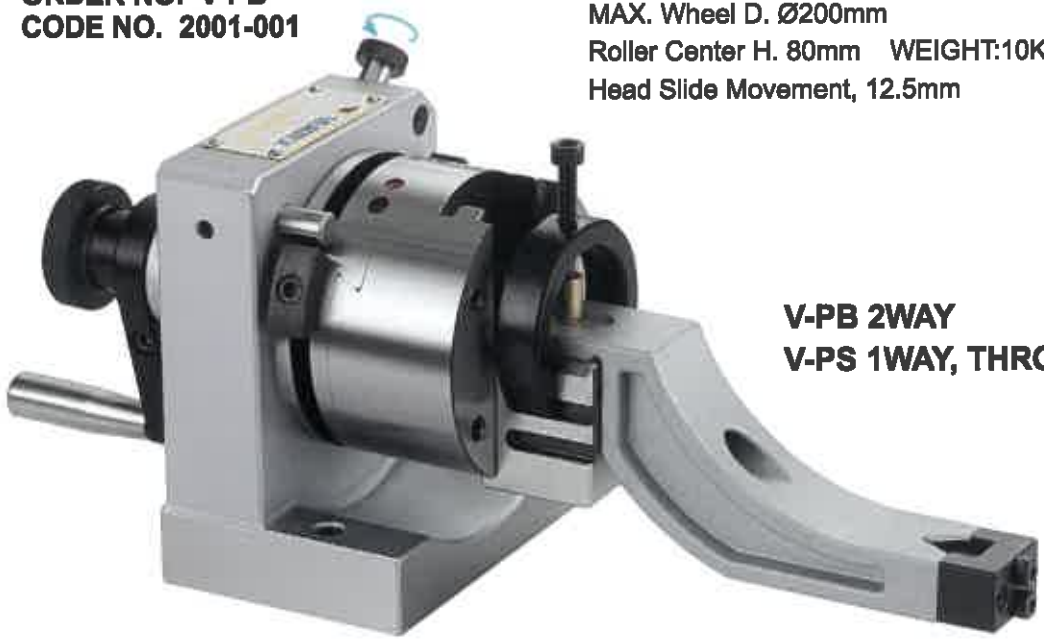

V-PB 2WAY
V-PS 1WAY, THROUGH HOLE

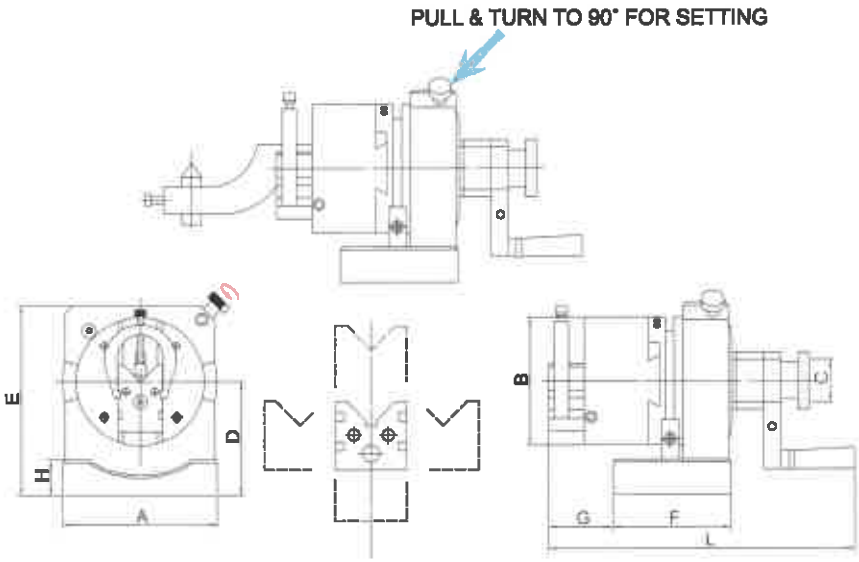

- Punch former is the fixture to grind the point of standard punches and E.D.M. electrodes for precise and fast operation.
- Besides the round, radius and multiangle punches, any special forms can be ground precisely .
  By V-PB, punch/ grinding wheel can be ground either concave or convex radius shape.
- The capacity is from 4mm to 30mm.
- Punch Former is a great dressing instrument. Precisely forming the grinding wheel can be done by assembling an ARM with the main body. Any combination of tangents or radial form of the grinding wheel may be dressed accurately by easy operation.
- Max. diameter of grinding wheel within 200mm can be dressed accurately and safely. The height from base to roller`s center is 80mm. Movement of each side can reach 12.5mm while aiming at the center of V block.
- The main body is made of one piece steel construction.

ORDER NO.	A	B	C	D	E	F	G	H	L	WEIGHT (kgs)	CODE NO.
V-PB	108	Ø90	Ø30	80-81	133	83	45	25	215	10	2001-001

Application grinding wheel style:

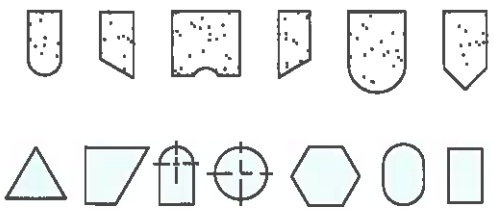

Surface Grinder

Punch Former

ORDER NO. V-PS **1 WAY Ø30 THROUGH HOLE**
CODE NO. 2001-010

Specification

D(diameter)of the pressed part of the punch...4-30mm
L(length)of the pressed part of the punch...above22mm
Upper and lower movement span of V block.....25mm
Horizontal movement span of V block(one side)..12.5mm
(tow side)...25mm
Length of V block 30mm
Height of the rotary central axis.....15mm
Cutting and dividing.....24 equal pieces(15")
Sand forming of the forming lever
(concave R).....100mmR
(convex R).....48mmR
Diamond sharpening knife : (small diameter)60x50(1/10carat)
(large diameter)100x50(1/4carat)

*Except for the handle and graduation scale all metal is special hard tool steel (SKS-2) heat treated at HRC 63

*V block can be disassembled for use separately.
V-PS the center through hole is ø30mm

V-PS allows go through from the center of grip, to clamp a more longer punch ejector pin, it can go deep into of the grip position directly. To assemble an ARM with the main body, any combination of radial form of the grinding wheel may be dressed accurately by easy operation.

PULL & TURN TO 90° FOR SETTING

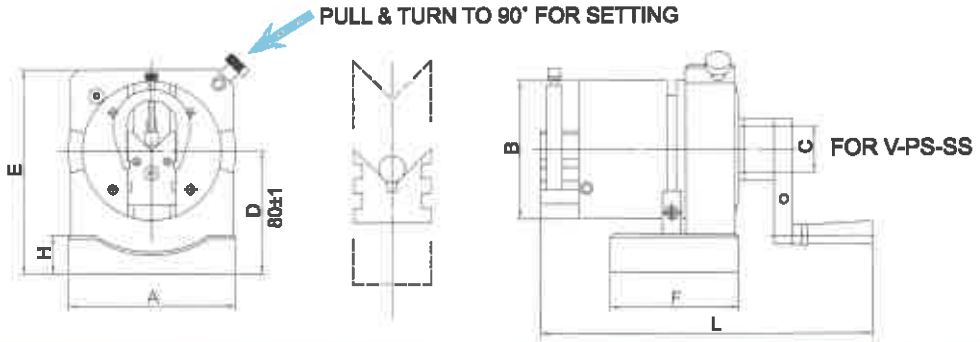

ORDER NO.	A	B	C	D	E	F	H	L	WEIGHT (kgs)	CODE NO.
V-PS	108	Ø90	Ø30	80-81	133	83	25	197	8.7	2001-010

Application grinding wheel style:

FOR INJECTOR PIN

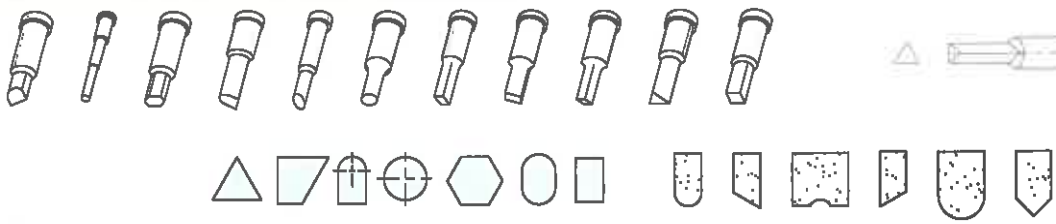

Special Part Accessory For Angular Dressing

ORDER NO.V-PF **CODE NO.2001-020**
Without Diamond WEIGHT: 0.7KG

The Wheel angular dressing

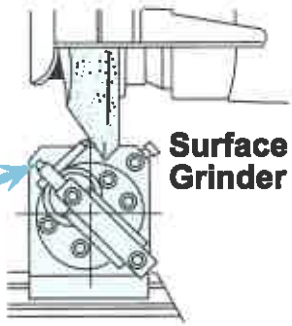

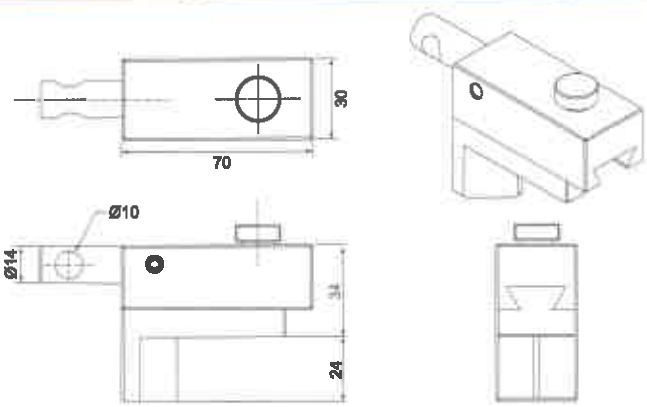

3-Jaws Punch Former

ORDER NO.V-PS-80J CODE NO:2001-030

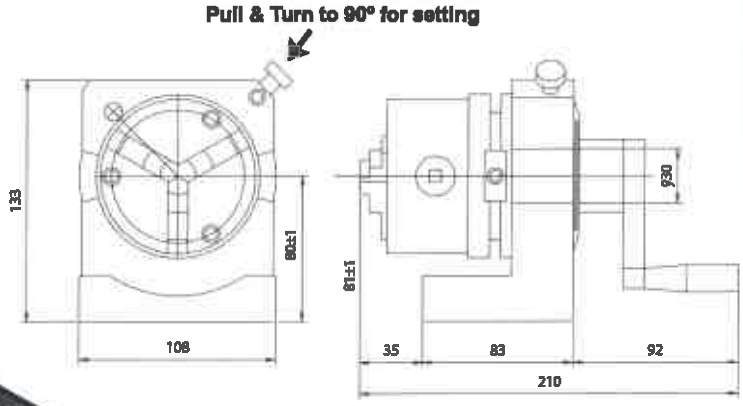

- VSC-3, 3 jaw chuck Clamping : Ø2-70 mm
- The center of 3 jaws punch grinder can move gently to fix and to help the concentricity more precision.
- This punch grinder can divide into 24 angles, each angle is 15 degrees at 10 seconds accuracy, the weight is 8.7kgs.
- This style base can be selected to set up with sine plate to make sine angles. The sine plate also can be used with other Machines.
- The base can be adjusted for sine angle.
  (ORDER NO.V-PS-80JS)

ER Collet Dividing Punch Former

ORDER NO.V-PS-ER32 CODE NO.2001-040
ORDER NO.V-PS-ER40 CODE NO.2001-041

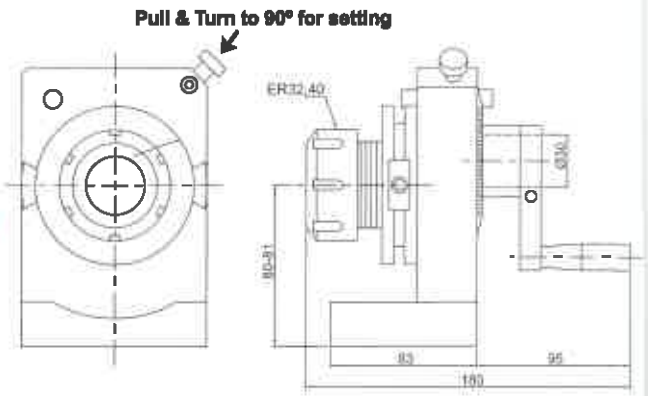

- ER Collet Dividing Punch Grinder put ER32 main body and with collet inner size 6, 8, 10, 12, 16, 20mm,total 6pcs. the weight is 11kgs. ER40 with 7pcs.
- The center of collet can move gently to help the concentricity more precision.
- This punch grinder can divide into 24° angles,each angle is 15 degrees at ±10 seconds accuracy.
- ER16 connection, special accessory (v-601 20-ER16-50L WITH 10PCS COLLET) can use ER16 base can select sine vise base which is good for sine angle use (ORDER NO.V-PS-ER32S).

ER Collet Dividing Punch Grinder With Sine Plate

ORDER NO.V-PS-ER32S CODE NO.2001-060

WEIGHT:11kgs

Example V-601
Special Acces.

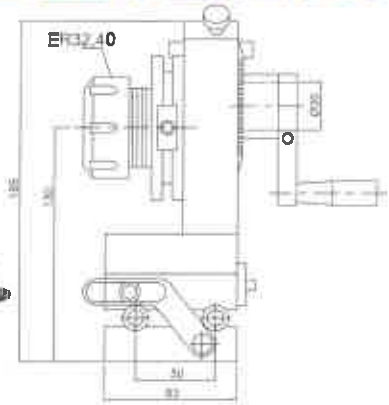

Tilting Feature

- ER Collet Dividing Punch Grinder put ER32 main body and with collet inner size 6, 8, 10, 12, 16, 20mm,total 6pcs.the weight is 11kgs.
- The center of collet can move gently to help the concentricity more precision.
- This punch grinder can divide into 24° angles,each angle is 15 degrees at ±10 seconds accuracy.

Special accessory:ER16 connection, (V-601 20-ER16-50L WITH 10PCS COLLET) can use ER16 base can select sine vise base which is good for sine angle use (ORDER NO.V-PS-ER32S) please choose from page C16

ER Collet Dividing Punch Grinder With Sine Plate

ORDER NO.V-PS-ER40S CODE NO.2001-065

WEIGHT:10kgs

Example V-601
Special Acces.

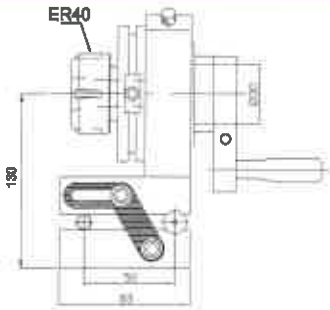

Tilting Feature

- ER Collet Dividing Punch Grinder put main body and with collet inner. ER40 with 7pcs, Size 6,8,10,12,16,20,25 mm
- The center of collet can move gently to help the concentricity more precision.
- This punch grinder can divide into 24° angles,each angle is 15 degrees at ±10 seconds accuracy.

Special accessory:ER16 connection, (V-601 20-ER16-50L WITH 10PCS COLLET) can use ER16 base can select sine vise base which is good for sine angle use (ORDER NO.V-PS-ER32S) please choose from page C16

3-Jaws Punch Former With Sine Plate

ORDER NO.V-PS-80JS CODE NO.2001-070

WEIGHT:11.7kgs

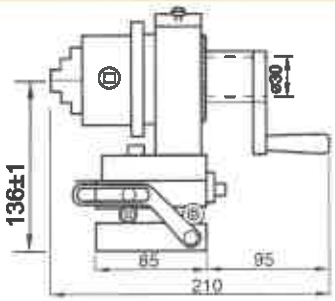

Tilting Feature

- The center of 3 jaws punch grinder can move gently to fix and to help the concentricity more precision.
- This punch grinder can divide into 24 angles, each angle is 15 degrees at 10 seconds accuracy, the weight is 8.7kgs.
- This style base can be selected to set up with sine plate to make sine angles. The sine plate also can be used with other Machines.
- The base can be adjusted for sine angle. (ORDER NO.V-PS-80JS)

Pounch Former With Sine Plate

V-PB & V-PS Type With Sine Plate
V-PB-BS 2 Way
V-PS-SS 1 Way Ø30 Through Hole
The Feature Is Show On Page B1,B2

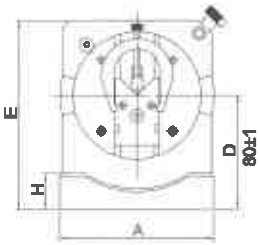

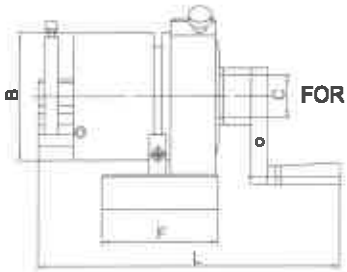

FOR V-PS-SS

ORDER NO.	A	B	C	D	E	F	G	H	L	TOTAL HEIGHT	SINE BAR CENTER	N.W.	CODE NO.
V-PB-BS	108	Ø90	Ø30	80-81	133	83	45	25	215	136	50	13.6 kgs	2001-080
V-PS-SS	108	Ø90	Ø30	80-81	133	83		25	197	136	50	13.0 kgs	2001-081

Sine Plate For All Type Punch Former

ORDER NO.V-PS-SP CODE NO.2001-050
WEIGHT:3.6kgs

OPTIONAL ACCESSORIES

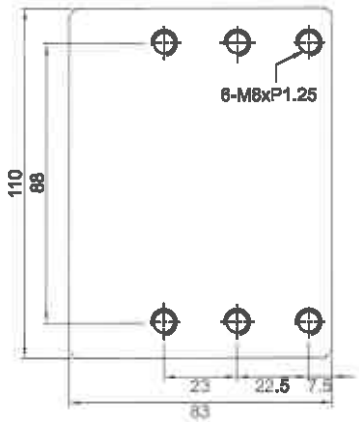

IT´S FIT WITH VERTEX´S :
V-PB, V-PS. V-PS-ER-32.
V-PS-ER40, V-PS-80J

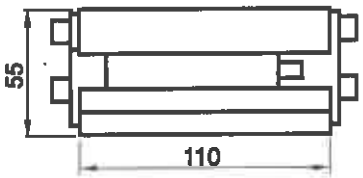

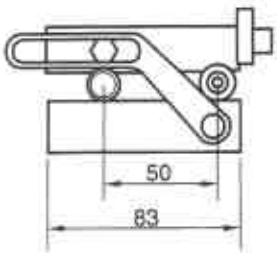

Concentric Test Stand

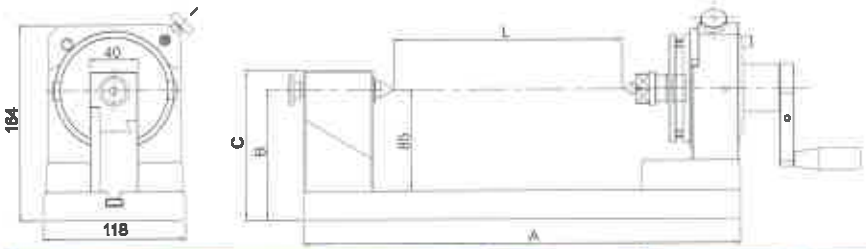

Feature

- For Checking Roundness & True Running Accuracy
- For Grinding High Accuracy Outter Diameter & Round Bar On Surface Grinder By Accurated Center And Holder.

SPEC

- Body Center hight : 85 mm
- Base to punch center : 109 mm
- Dividsion & Accuracy : 24 & 15°±10"
- Workpiece length : 0~450mm
- Material : sks3, HRC 60~62°
- Roundness : 0.002 mm
- Parallelism : 0.002 / 100mm
- Squareness : 0.002 / 100mm

Unit:mm

ORDER NO.	A	B	C	L	Divid Sion	Graduation	N.W. (kgs)	CODE NO.
VCI-150P	375	109	125	0-150	24 (15°±10")	360°	20	2021-113
VCI-250P	475	109	125	0-250			23	2021-114
VCI-350P	575	109	125	0-350			26	2021-115

Fixed Speed Punch Former

AUTO TYPE

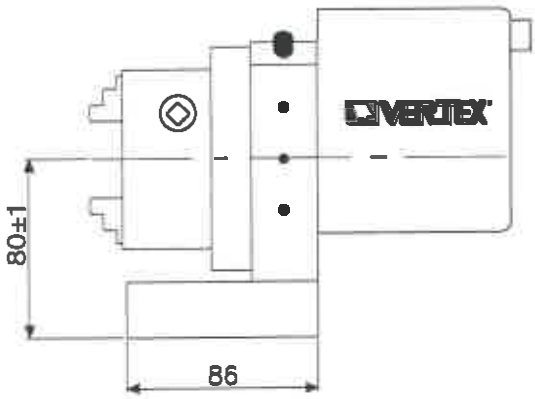

- The Punch Former with a motor attached can be applied to precisely grind a punch to round in a short time and saves the processing time.
- Chuck Type can clamp workpieces in a wide range.
- 3 inch 3 jaw chuck.

ORDER NO.	O.D.	I.D.	Max. Dia. of Workpiece	Center Heignt	Motor Output-W Input-V	Graduation	R.P.M.	N.W. (kgs)	CODE NO.
V-PS-80M	2-70	24-64	Ø50	80-81	15W 110/220V	360°	110	11.72	2021-130

Punch Grinder

VERTEX

ORDER NO.V-PGS CODE NO.2002-001

MINI-TYPE PUNCH GRINDER Ø1.5-3mm

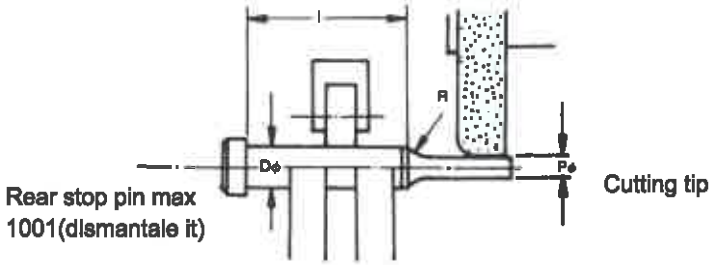

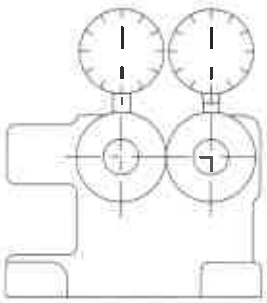

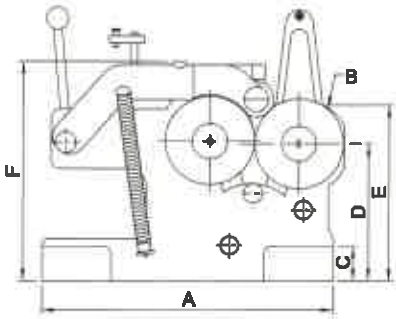

This is a mini type punch grinder which can grind fine punch of outside diameter from 1.5mm to 3mm.
N.W.4.5kgs
Accuracy of point A within 0.005mm and point B Within 0.008mm while turning.

ORDER NO.	A	B	C	D	E	F	WEIGHT (kgs)	CODE NO.
V-PGS	167	Ø51	20	78	100	125	4.5	2002-001

Punch Grinder

ORDER NO.V-PG CODE NO.2002-010

STANDARD- TYPE Ø1.5-Ø25 WEIGHT: 6.6kgs

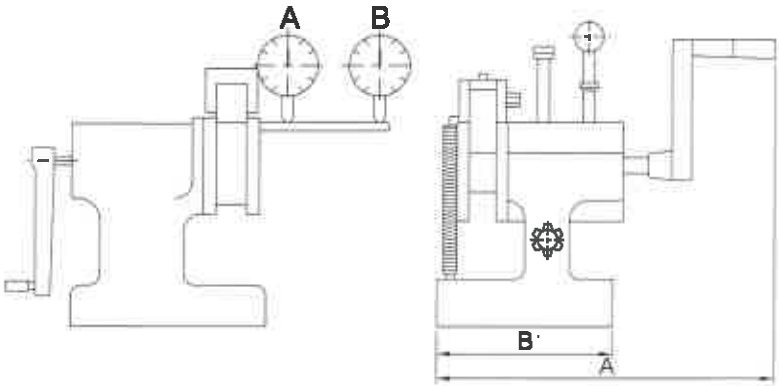

Punch grinder is a tool which can be put on the surface plate of grinding machine for round punches(1.5mm-25mm).
It can be ground by putting among three rollers of punch grinder. without checking the center.
Accuracy of roller within 0.005mm while turning right or left. It can allow lenght 5-35mm
Accuracy of point A within 0.005mm and point B Within 0.008mm while turning.

ORDER NO.	A	B	WEIGHT (kgs)	CODE NO.
V-PG	172	90	6.6	2002-010

Punch Grinder

ORDER NO.V-PGM CODE NO.2002-020
WITH MOTOR TYPE Ø1.5-Ø25
WEIGHT: 11.8kgs

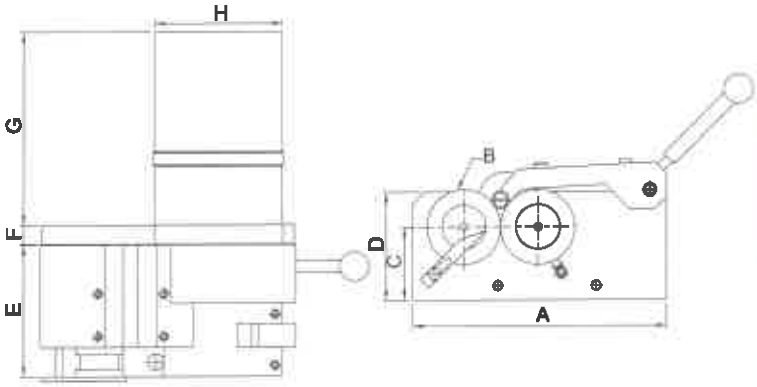

PUNCH GRINDER

Features

1. High accuracy cylindrical grinding work is possible, just putting this economical unit on surface grinder.
2. No center alignment necessary. just put work piece on rollers.
3. Portable with single hand, thus easily set up.
4. With rollers motor -driven, attention can be concentrated on table/wheel feeds.
5. Work can be formed in radius taper as well
6. Double roller unit available for long pin or punch grinding.

FEATURES
Mounting surface(RLxFB).....175X218X90mm
50Hz/220v.....108rpm
Roller speed 60Hz/110v.....129rpm
Accuracy(Roundness and concentricity).....25.4mm
Roller driving motor 110v, Single phase, 25W
(Specifications are subject to change without notice.)

ORDER NO.	A	B	C	D	E	F	G	H	WEIGHT (kgs)	CODE NO.
V-PGM	174	Ø51	50	74	90	13	132	87	11.8	2002-020

Punch Grinder

ORDER NO:V-PGA CODE NO.2002-030 WEIGHT:3.1kgs

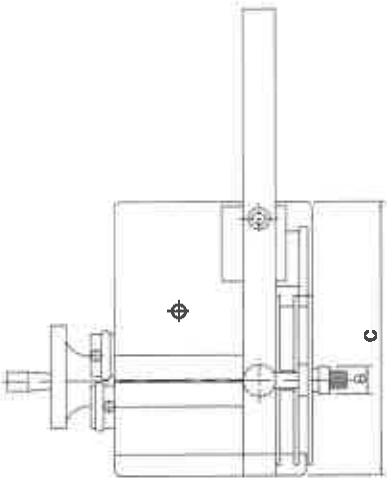

Ø0.5~Ø10

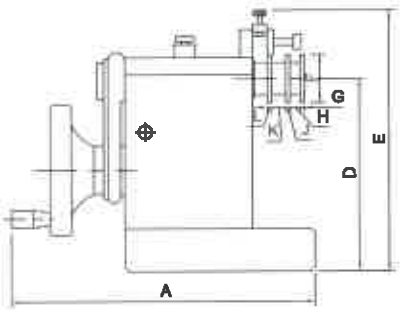

1. The small punch grinder can process from dia ø0.5mm to 6mm. Smallest workpiece length : 10mm
   This punch grinder can work with surface grinding machine and to grinding any sizes.
2. Easy operation and high precision make it to be the best grindig tool for small workpiece.

ORDER NO.	A	B	C	D	E	F	G	H	J	K	L	WEIGHT (kgs)	CODE NO.
V-PGA	142	Ø13	128	90	122	22.4	2	4.5	2	6.5	2	3.1	2002-030

Mini Tool Maker Vise

VERTEX®

ORDER NO.VMV-10 CODE NO.2003-001

WEIGHT:0.3kg

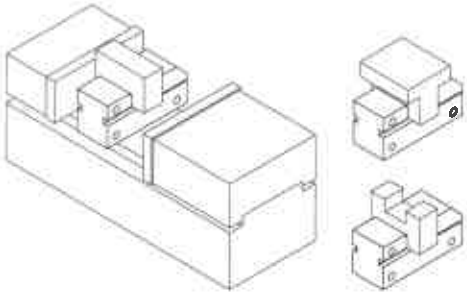

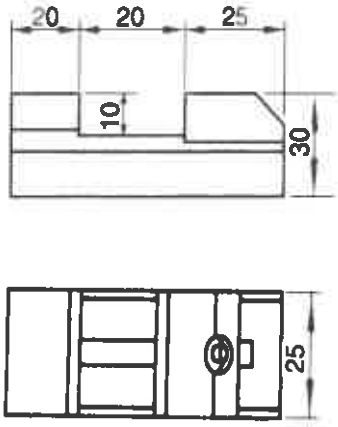

Tool makers vise of mini type which can be put in a bigger vise to process the small and precise workpiece.Also it can be used in an E.D.M. machine and grinding machine.

Squareness and parallelism : within ±0.005 mm / 100 mm.

ORDER NO.	Weight (kgs)	CODE NO.
VMV-10	0.3	2003-001

Tool Maker Vise

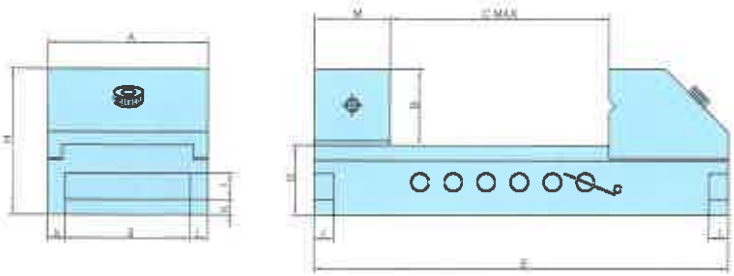

- Made of SK material of J.I.S. specification.
- Hardened by heat treatment and precision ground.
- Squareness and parallelism are ensured to be within ±0.005 mm / 100 mm.
- It can be used and kept its high precision while standing on its base, sides or extremity, for inspection use in stead of squares due to its extremely accuracy.
- Hardness: HRC 54°±2°

ORDER NO.	MATERIAL	A	B	C max	D	E	I	f	g	h	j	k	H	M	O	N.W (KGS)	CODE NO
VMV-15	SK2	36	20	40	20	100	5	8	24	5	6	6	40	20	6	0.9	2003-010
VMV-20	SK2	47	29	70	28	150	5	10	37	6	5	5	57	30	8	2	2003-011
VMV-25	SK2	62	34	84	28	170	7	10	52	6	5	5	62	30	8	3.3	2003-012
VMV-30	SK2	72	34	98	32	190	9	12	56	7	8	8	66	35	8	4.5	2003-013
VMV-35	SK2	88	45	125	40	230	12	12	64	11	12	12	85	40	10	7	2003-014
VMV-40	SK2	98	45	130	40	235	12	12	64	11	17	17	85	40	10	8.9	2003-015
VMV-50	SK2	125	50	150	50	287	12	13	73	14	26	26	100	50	14	15.5	2003-016
VMV-60	S50C	150	50	200	50	330	12	14	76	14	37	37	100	50	14	21.4	2003-017

Tool Maker Vise

VERTEX®

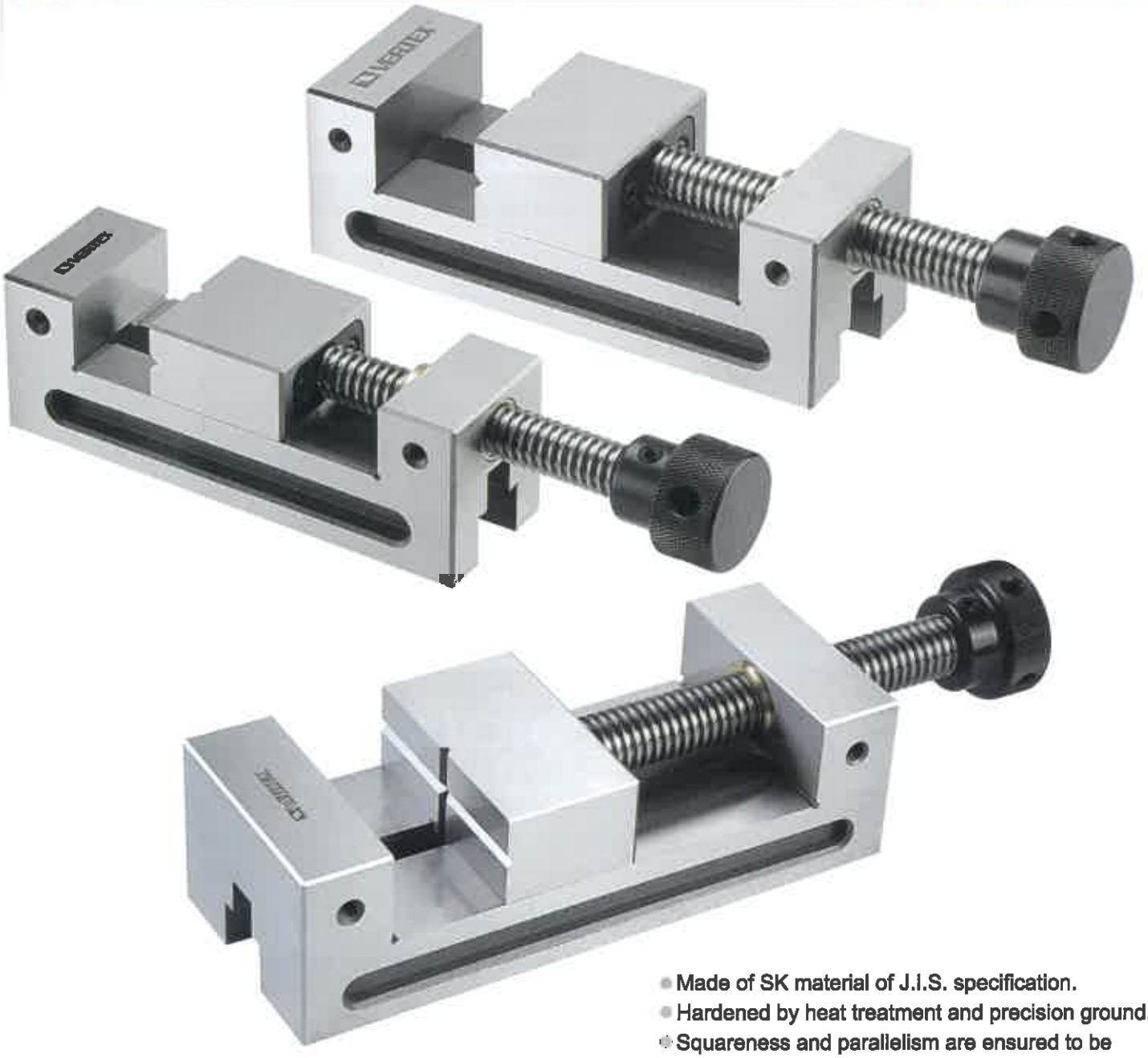

- Made of SK material of J.I.S. specification.
- Hardened by heat treatment and precision ground.
- Squareness and parallelism are ensured to be within ±0.005 mm / 100 mm.
- It can be used and kept its high precision while standing on its base, sides or extremity, for inspection use in stead of squares due to its extremely accuracy.
- Hardness: HRC 54°±2°

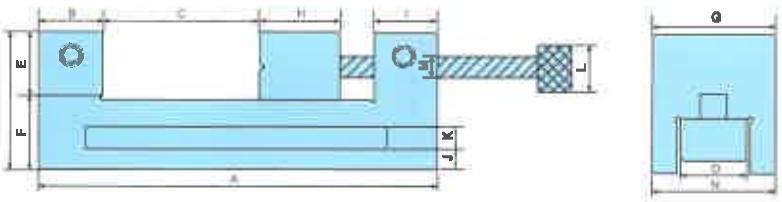

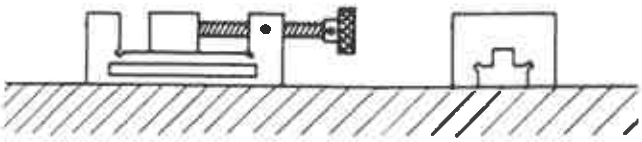

TOLERANCE	±0.005mm / 100mm

Unit:mm

ORDER NO.	MATERIAL	A LENGTH	B	JAW C OPENING	D	E	F	G	H	I	J	K	L	M	N	O	HEIGHT (mm)	HARDEN	WEIGHT (KGS)	CODE NO.
VDV-20	SK2	155	25	55	54	25	29	48	45	25	9.50	10.15	34.70	15.80	48	18.7	54	HRC54°±2°	2.5	2003-020
VDV-25	SK2	176	25	75	60	30	30	63	44.80	25	10	10.90	39.60	18.95	63.10	26	60	HRC54°±2°	3.9	2003-021
VDV-30	SK2	181	30	71	70	30	40	73	51.85	25	14	12.35	50.35	18.95	73	26	70	HRC54°±2°	5.7	2003-022
VDV-35	SK2	250	35	121	73	38	35	88	55.40	35.55	10.80	11.60	54.85	25.35	88.45	30.20	73	HRC54°±2°	9.2	2003-023
VDV-40	SK2	250	35	121	73	38	35	98	55	34.75	11.80	11.55	54.65	25.35	98.60	29.60	73	HRC54°±2°	10.1	2003-024

Sine Vise

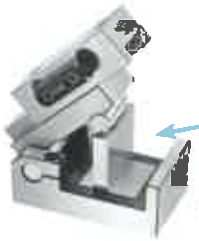

Height
Gage Block
PAGE B76

Example

- Compound angles easily and quickly set.
- Adjustments up to 46 degrees.

Accuracy :
Material Hardened: SKS HRC 60° Sub-zero processing.
Parallelism: Within 0.003 / 100 mm
Squareness: Within 0.005 / 100 mm
Angle tol: Within 15 sec Within 20 sec
*Sine conversion table attached page B16

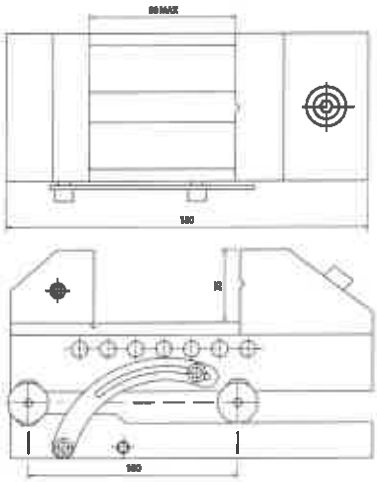

SPECIFICATION

Unit:mm

ORDER NO.	MATERIAL	LENGTH	WIDTH	JAW OPENING	JAW HEIGHT	HEIGHT (mm)	ANGLE	HARDEN	N.W (KGS)	CODE. NO.
SVB-20	SK2	155	48	80	30	93.5	0°-46°	HRC56°-58°	4.4	2003-030
SVB-25	SK2	175	63	90	35	102.5	0°-46°	HRC56°-58°	6	2003-031
SVB-30	SK2	180	73	90	35	103.8	0°-46°	HRC56°-58°	6.9	2003-032

Sine Vise

Height
Gage Block
PAGE B76

Example

- Compound angles easily and quickly set.
- Adjustments up to 46 degrees.

Accuracy :
Material Hardened: SKS HRC 60° Sub-zero processing.
Parallelism: Within 0.003 / 100 mm
Squareness: Within 0.005 / 100 mm
*Sine conversion table attached page B16

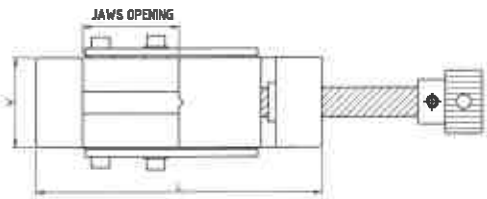

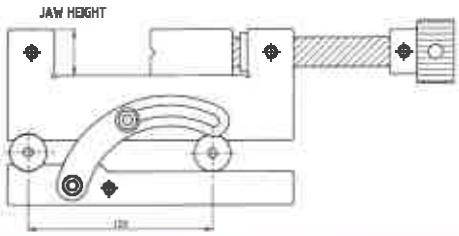

SPECIFICATION

Unit:mm

ORDER NO.	MATERIAL	LENGTH	WIDTH	JAW OPENING	JAW HEIGHT	HEIGHT (mm)	ANGLE	HARDEN	N.W (KGS)	CODE. NO.
SVD-200	SK2	155	48	60	25	94	0°-46°	HRC54°±2	4.6	2003-040
SVD-250	SK2	176	63	68	30	97.5	0°-46°	HRC54°±2	6.4	2003-041
SVD-300	SK2	180	73	72	30	103	0°-46°	HRC54°±2	8.4	2003-042

Tool Makers Vise

VERTEX®

Good Design With High Precision And Rigid

Accuracy :
Material Hardened: SKS HRC 60° Sub-zero processing.
Parallelism: Within 0.003 / 100 mm
Squareness: Within 0.005 / 100 mm
Angle tol: Within 15 sec Within 20 sec
Material: SKS2
*Sine conversion table attached page B16

Fixed Down Jaw Designed

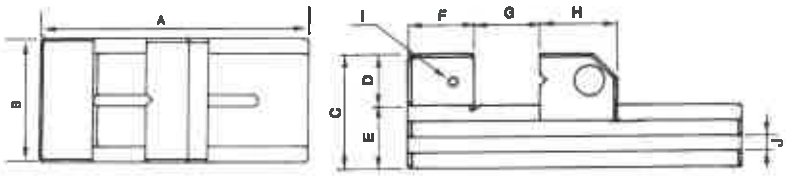

ORDER NO.	A	B	C	D	E	F	G	H	I	J	N.W (kgs)	CODE NO.
VC20	150	48	53	25	28	25	84	40	M6	8	1.6	2003-070
VC25	176	63	59	30	29	30	95	48	M6	8	2.8	2003-071
VC30	190	73	68	35	33	35	100	53	M6	9	4	2003-072
VC40	245	98	90	45	45	45	135	65	M8	12	9.02	2003-073

Tool Makers Vise

Accuracy :
Material Hardened: Sub-zero processing.
Parallelism: Within 0.003 / 100 mm
Squareness: Within 0.005 / 100 mm
Angle tol: Within 15 sec Within 20 sec
Material: SKS2
Hardness: HRC 54°±2°
*Sine conversion table attached page B16

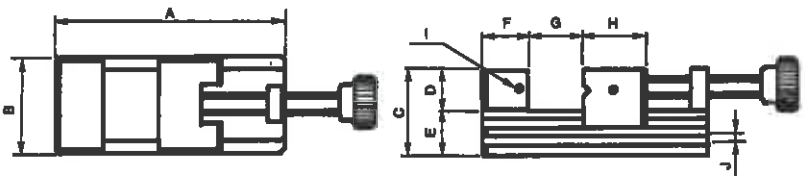

ORDER NO.	A	B	C	D	E	F	G	H	I	J	N.W (kgs)	CODE NO.
V-VE20	90	60	50	23	27	25	32	30	M5	6x6	1.62	2003-080
V-VE25	160	70	62	28	34	33	80	45	M6	7.5x7	4.02	2003-081
V-VE30	175	73	65	30	35	35	93	45	M6	7.5x7	4.7	2003-082

Precision Universal Angle Vise

VERTEX®

PAT.

NEW

VUA-3

- Precision graduction for accurate reading.
- Its swivelling and tilting features make this unit well suited for straight or inclined surface, angular driling machining on various machine tools as precision grinding machine, boring and milling machine, electrical discharge machine etc.
- Tolerence ±0.01mm/100mm.
- Vise bottom to base parallelism ±0.02 mm
- Squareness ±0.02
- 360° Horizontal swivel
- 45° Vertical tilting
- Precision ground
- Material: SK-2
- Hardness: HRC 52°±2°
- Load capacity : 25kgs

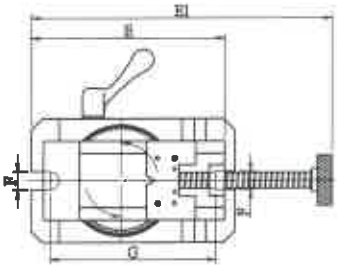

VUA-4

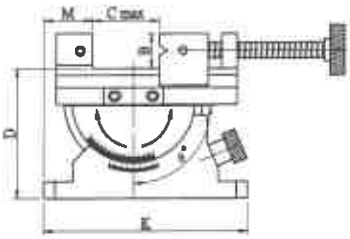

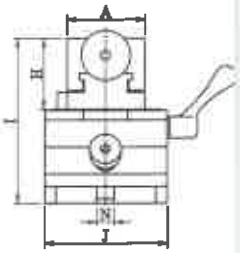

Unit:mm

ORDER NO.	A	B	C MAX	D	E	E1	F	G	H	I	J	K	M	N	θ	G.W(KGS)	CODE.NO.
VUA-3	70	31	80	115	173	291	16	156	63	146	110	182	43	16	-20°~50°	12	2003-050
VUA-4	88	35	110	132	193	346	16	156	83	167	110	182	29	16	-20°~50°	15	2003-051

Precision Universal Angle Plate

- Precision grounded.
- Rigid design.
- The table can swivel 360°,and tilts 45°
- It can put tool maker vise VMV-type VDV-type or 3 jaw chuck for clamping
- The graduction for accurate reading
- Vise bottom to base parallelism ±0.02 mm
- Squareness ±0.02
- Material: SK-2
- Hardness: HRC 52°±2°
- Load capacity : 25kgs

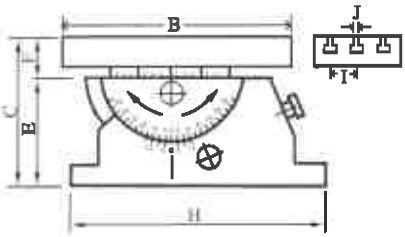

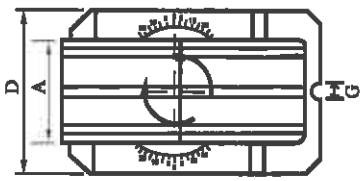

ORDER NO.	A	B	C	D	E	F	G	H	I	J	G.W (kgs)	CODE NO.
VUA-408	100	200	133	110	83	50	16	182	30	12	15	2003-055
VUA-510	126	250	133	110	83	50	16	182	40	12	18.1	2003-056

Precision Universal Angle Chuck

VERTEX®

NEW

PAT.

With VSC-4 Chuck

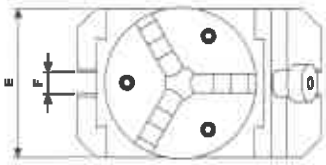

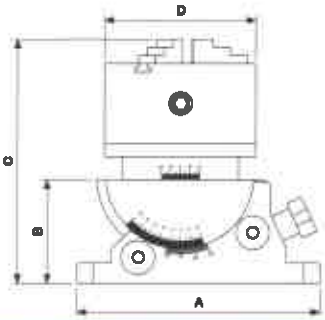

- Precision graduction for accurate reading.
- Its swivelling and tilting features with clamping make this unit well suited for straight or inclined surface, angular driling machining on various machine tools.
- With VSC-4 3-Jaw chuck.
- O.D. clamping Ø3-90 mm,
- I.D. clamping Ø32-84 mm.
- Tolerence ±0.01mm/100mm.
- 2 axis with angle scale
- For angle setting
- Chuck indexing / Rotating setting
- Tilting Features same as VUA series, Page B13.
- Load capacity : 25kgs

ORDER NO.	A	B	C	D	E	F	G.W (kgs)	CODE NO.
VUA-100J	180	77	181	112	110	16	14	2003-060

Precision Universal Angle Collet Chuck

NEW

Capacity Ø3-Ø30

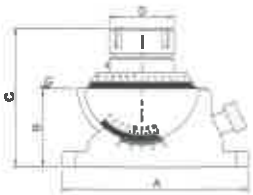

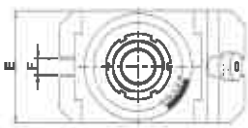

- Precision graduation for accurate reading.
- Its swivelling and tilting features with clamping make this unit for straight or inclined surface, angular drilling machining on various machine tools.
- Tolerence ±0.01 mm / 100 mm.
- 360˚ horizontal swivel, 45˚ vertical tilting.
- Suit for multi - angle cutting.
- Simple way for mass production.
- Hardness : HRC 52˚±2˚
- Load capacity : 25kgs

Standard Accessories: With 15pcs ER-40 Collet (4, 5, 6, 8, 10, 12, 13, 15, 16, 18, 20, 21, 22, 25, 26)

ORDER NO.	A	B	C	D	E	F	G.W (kgs)	CODE NO.
VUA-ER40	180	77	136	63	110	16	17.48	2003-065

Optional collet ER-40-Ø 27, 28, 29, 30 mm

Free Angle Table

VERTEX

NEW

Features:

- Quick setting
- Operating is very quick and easy, can increase so much working effciency than you can Image.
- 360° Rotation, Tilting 30°
- For non-normal angle setting.
- Its swivelling and tilting features with chuck clamping make this unit for round & square, angular drilling machining on various machine tools or for bench work table.
- Plate is preciely ground.
- For clamping tool vise & many other way of clamping.

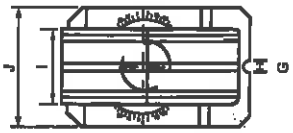

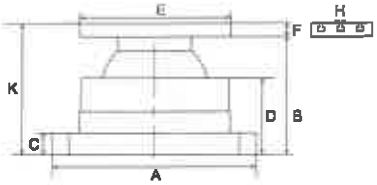

ORDER NO.	A	B	C	D	E	F	G	H	Table size I	Table size J	K	G.W (kgs)	CODE NO.
VAV-1020	140	120	20	72	200	34	17	12	100	140	153	15	2003-120
VAV-1325	140	120	20	72	250	34	17	12	126	140	153	17	2003-121

Precision Sine Vise

HARDENESS HRC 60˚, SKS3
PARALLELISM 0.003 / 100 mm
SQUARENESS 0.005 / 100 mm

THE CLAMP HANDLE IS PLACED UNDER WORK PIECE.

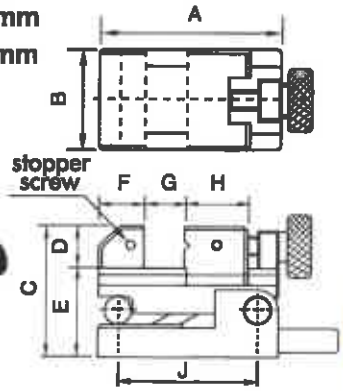

Height Gage Block PAGE B76

●Example

ORDER NO.	CODE NO.
SVC-100	2003-090

Unit:mm

A	130
B	70
C	93
D	30
E	63
F	33
G	45
H	45
I	M5
J	100
Max.angle	46˚
Weight(kgs)	5.5

Precision Sine Vise

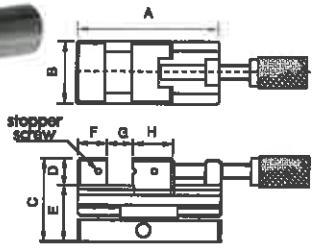

SIN BAR CENTER 50 mm

HARDENESS HRC 60˚, SKS3
PARALLELISM 0.003 / 100 mm
SQUARENESS 0.005 / 100 mm

ORDER NO.	CODE NO.
SVL-50	2003-100

Unit:mm

A	160
B	73
C	93
D	30
E	63
F	33
G	80
H	45
I	M5
Max.angle	46˚
Weight(kgs)	6.6

Two Way Vise

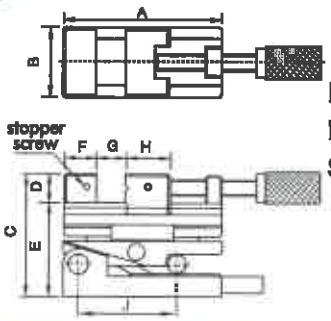

HARDENESS HRC 60˚, SKS3
PARALLELISM 0.003 / 100 mm
SQUARENESS 0.005 / 100 mm

ORDER NO.	CODE NO.
SVS-100	2003-110

2 WAYS

Unit:mm

A	160
B	73
C	124
D	30
E	94
F	33
G	80
H	45
I	M5
J	100
Max.angle	46˚
Weight(kgs)	8.3

Sine Bar With Magnetic

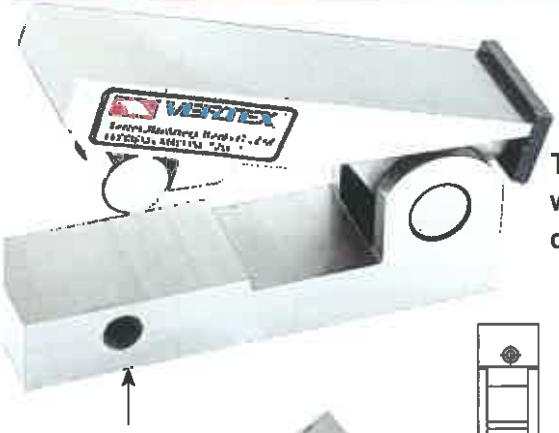

There is magnet in the bottom which can be run on any kind of machine for testing angle use.

The thread can for stopper screw

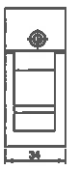

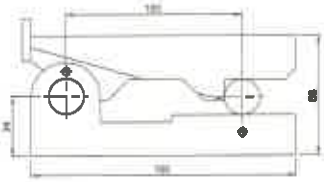

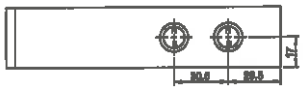

Height Gage Block PAGE B76

●Example

Unit:mm

ORDER NO.	SQUARNESS	ACCURACY	PARALLELISM	HARDENESS	MATERIAL	N.W. (kgs)	CODE NO.
V-S50M	0.005mm /100mm	±0.002	0.002mm/ 100mm	HRC50°	SK-3	0.34	2004-001
V-S100M	0.005mm /100mm	±0.002	0.002mm/ 100mm	HRC50°	SK-3	2.06	2004-002

Sine Bar

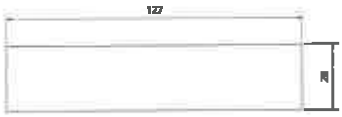

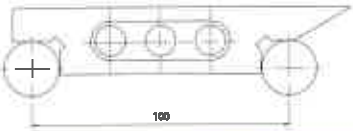

Unit:mm

ORDER NO.	LENGTH	WIDTH	HEIGHT	CENTER DISTANCE	PARALLEL	HARDEN	BLOCKS DIA.	MATERIAL	N.W (kgs)	CODE NO.
VS-100	127	28	35	0.005	0.005/ 100mm	HRC50°	Ø20mm	SK-3	0.76	2004-010

Sine Bar-Inch

Change of the sine angle must be count on sine bar inspection, the bar's tolerance within 0.005 mm / 100 mm

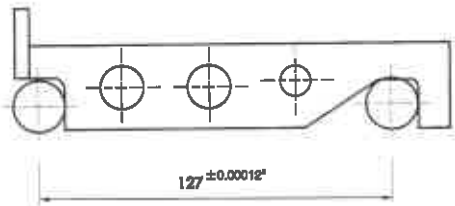

Unit:Inch

ORDER NO.	LENGTH	WIDTH	HEIGHT	CENTER DISTANCE	PARALLEL	HARDEN	BLOCKS DIA.	MATERIAL	N.W (kgs)	CODE NO.
V-S25	6-3/8"	1"	1-1/4"	127	0.00012"	HRC52°	3/4"	SK2	1	2004-020
V-S50	6-3/8"	2"	1-1/4"	127	0.00012"	HRC52°	3/4"	SK2	1.8	2004-021

HOW TO CHOOSE THE BLOCK FOR SINE BAR

DISTANCE / GAUGE BLOCK / CAN GET HEIGHT / DEGREE	SIN BAR CENTER (50)	SIN BAR CENTER (100)
2°	1.7405	3.4899
3°	2.6168	5.2336
4°	3.4878	6.9756
5°	4.3578	8.7155
6°	5.2264	10.4528
7°	6.0935	12.1869
8°	6.9587	13.9173
9°	7.8217	15.6434
10°	8.6824	17.3648
11°	9.5404	19.0809
12°	10.3956	20.7911
13°	11.2476	22.4951
14°	12.0961	24.1921
15°	12.9401	25.8819
16°	13.7819	27.5637
17°	14.6186	29.2371
18°	15.4058	30.9017
19°	16.2784	32.5586
20°	17.1010	34.2020
21°	17.9184	35.8367
22°	18.7303	37.4606
23°	19.5366	39.0713
24°	20.3368	40.6736
25°	21.1309	42.2618
26°	21.9186	43.8371
27°	22.6995	45.3990
28°	23.4736	46.9471
29°	24.2405	48.4809
30°	25.0000	50.0000
31°	25.7519	51.5038
32°	26.4960	52.9919
33°	27.2320	54.4639
34°	27.9596	55.9192
35°	28.6788	57.3576
36°	29.3893	58.7785
37°	30.0908	60.1815
38°	30.7831	61.5661
39°	31.4660	62.9320
40°	32.1394	64.2787
41°	32.8030	65.6059
42°	33.4565	66.9130
43°	34.0999	68.1998
44°	34.7329	69.4658
45°	35.3553	70.7106

EDM Tool Marker Vise (STAINESS) VERTEX

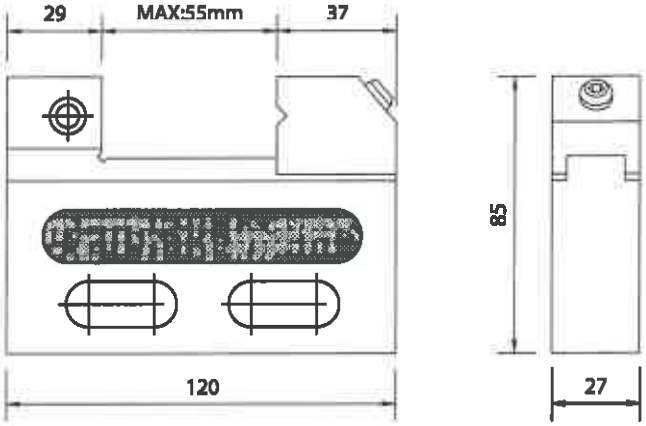

Material: SUS 440
Hardness: HRC 58°~60°
Squareness: Within 0.005 mm
This vise is for wire cutter use. Each of the parts was manufactured by stainless steel and with the appliance of high erosion resisting.
※ Not 100% magnetic proof

PARALLELISM	±0.002 mm / 100 mm
SQUARENESS	±0.002 mm / 100 mm

ORDER NO.	WEIGHT (kgs)	CODE NO.
VSTV-50W	1.4	2008-040

MAX.OPENING	55 mm
THICKNESS	27 mm
JAW DEEP	25 mm
N.W	1.01 kgs
MATERIAL	SUS 440
HARDNESS	HRC 54°±2°

EDM Tool Maker Vise (STAINLESS)

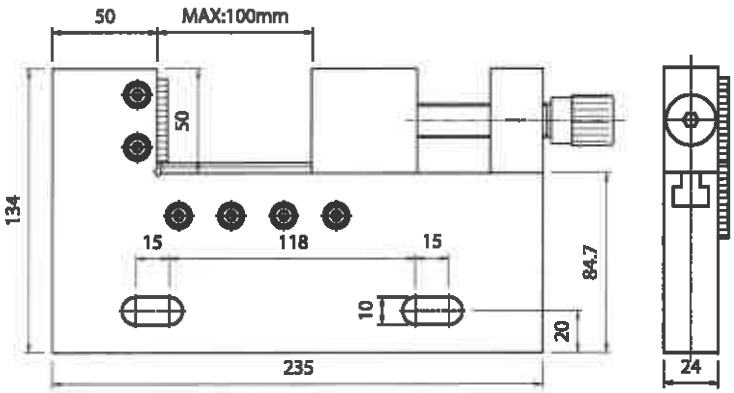

Do not over lock.
※ Not 100% magnetic proof

PARALLELISM	±0.00 2mm / 100 mm
SQUARENESS	±0.002 mm / 100 mm

ORDER NO.	WEIGHT (kgs)	CODE NO.
VSTV-100W	4.88	2008-050

MAX.OPENING	100 mm
THICKNESS	24 mm
JAW DEEP	50 mm
N.W	4.88 kgs
MATERIAL	SUS420
HARDNESS	HRC 54°±2°

EDM Tool Marker Vise (STAINESS) VERTEX®

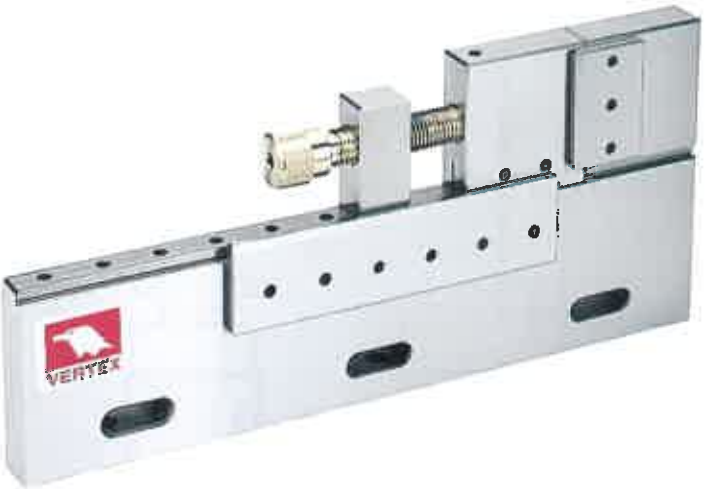

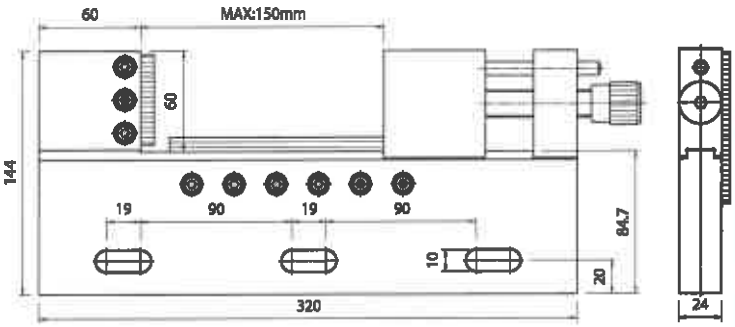

- Do not over lock.

※ Not 100% magnetic proof

PARALLELISM	±0.002 mm / 100 mm
SQUARENESS	±0.002 mm / 100 mm

ORDER NO.	WEIGHT (kgs)	CODE NO.
VSTV-150W	6.75	2008-060

MAX.OPENING	150 mm
THICKNESS	24 mm
JAW DEEP	60 mm
N.W	6.75 kgs
MATERIAL	SUS420
HARDNESS	HRC 54°±2°

EDM Tool Maker Vise (STAINLESS)

- Over lock may break vise.

※ Not 100% magnetic proof

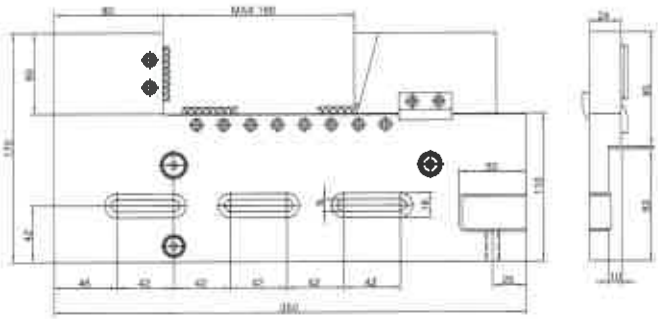

- Parallelism: 0.003 / 100 mm, Squareness: 0.005 / 100 mm.
- Hardness: up to HRC 45°~55°.
- The vise can be adjusted up and down, left and right, forth and back to set parallelism.
- High water pressure resistance.

Leveling

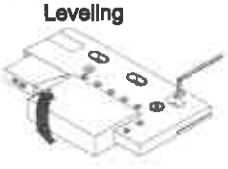

Leveling

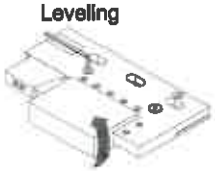

Parallel Adjustment

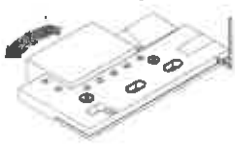

PARALLELISM	±0.003 mm / 100 mm
SQUARENESS	±0.005 mm / 100 mm

ORDER NO.	WEIGHT (kgs)	CODE NO.
VSTV-320W	8	2008-090

MAX.OPENING	160 mm
THICKNESS	24 mm
JAW DEEP	60 mm
N.W	8 kgs
MATERIAL	STAVAX
HARDNESS	HRC 52°±2°

Electrode Vise (STAINLESS)

VERTEX®

MINI TYPE
JAW WIDTH 25mm

JAW OPENING 20mm

(STAINLESS)FOR EDM

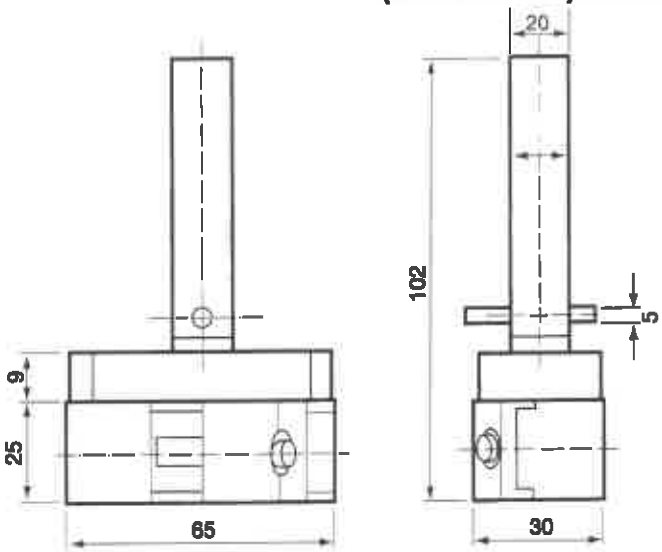

※ Not 100% magnetic proof

Material	SUS440
Parallelism	within 0.003 mm / 100 mm
Squareness	within 0.005 mm / 100 mm
Harden treatment	up to HRC 58°

ORDER NO.	MATERIAL	LENGHT	WIDTH	JAW OPENING	JAW HEIGHT	HARDEN	WEIGHT (kgs)	CODE NO.
VEH-20MS	SUS440	65	25	20	10	HRC 58°	0.7	2008-020

Electrode Vise (STAINLESS)

(STAINLESS)FOR EDM

JAW WIDTH 25mm
JAW OPENING 50mm

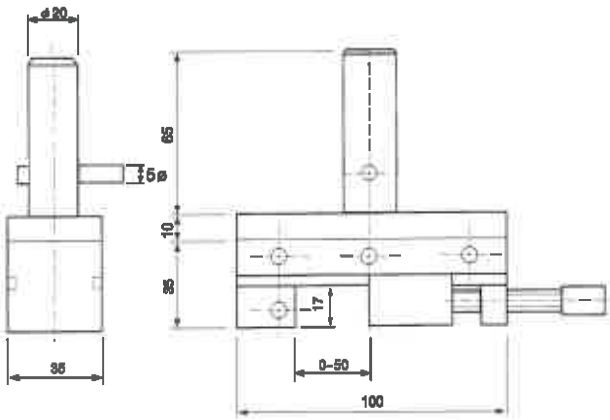

※ Not 100% magnetic proof

Material	SUS440
Parallelism	within 0.003 mm / 100 mm
Squareness	within 0.005 mm / 100 mm
Harden treatment	up to HRC 58°

ORDER NO.	MATERIAL	LENGHT	WIDTH	JAW OPENING	JAW HEIGHT	HARDEN	WEIGHT (kgs)	CODE NO.
VEH-20DS	SUS440	100	35	50	17	HRC 58°	1.3	2008-030

Tool Maker Vise (STAINLESS)

VERTEX®

MINI TYPE FOR EDM

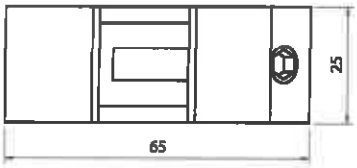

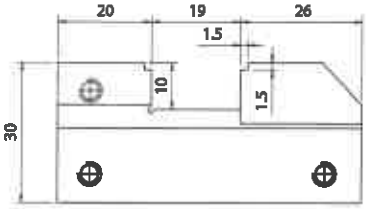

Tool makers vise of mini type which can be put in a bigger vise to process the small and precise workpiece. Also it can be used in an E.D.M. machine and grinding machine.
Squareness and parallelism: within ±0.003 / 100 mm
※ Not 100% magnetic proof

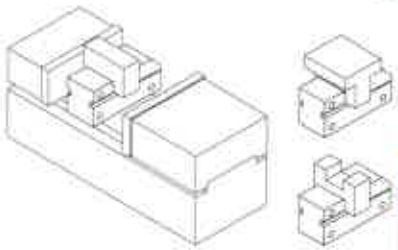

ORDER NO.	MATERIAL	LENGHT	WIDTH	JAW OPENING	JAW HEIGHT	HARDEN	WEIGHT (kgs)	CODE NO.
VSTV-10V	SUS 440	65	25	19	10	HRC 56°-58°	0.3	2008-070

TOOL MAKER VISE

Tool Maker Vise (STAINLESS)

MINI TYPE FOR EDM

ORDER NO.	WEIGHT (kgs)	CODE NO.
VBST-30	4.5	2008-075

Material: SUS 440
Hardness: HRC 58°~60°
Squareness: Within 0.005 / 100 mm
※ Not 100% magnetic proof

Unit:mm

TOLERANCE	
A	±0.004 mm
B	±0.005 mm
C	±0.005 mm
D	±0.005 mm
E	±0.005 mm
F	±0.005 mm
G	±0.005 mm

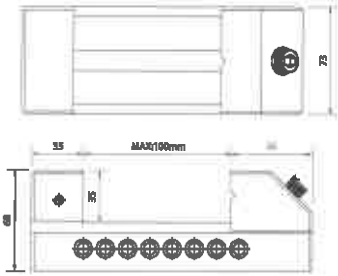

Tool Maker Vise (STAINLESS)

FOR EDM

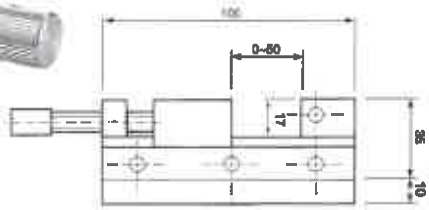

VSTV-20

- Material: SUS 440
- Hardness: HRC 56°
- Squareness: Within 0.005 / 100 mm
- It was made by tool steel of stainless steel system and was precision ground after hardened by heat treatment.So, it will not be rusted even permeation.
- The vise can clamp workpiece by moveable Jaw without lifting.It is easier and convenient for processing small workpieces.

※ Not 100% magnetic proof

VSTV-25

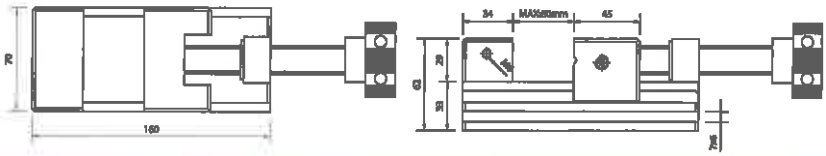

ORDER NO.	MATERIAL	LENGHT	WIDTH	JAW OPENIG	JAW HEIGHT	HARDEN	WEIGHT (kgs)	CODE NO.
VSTV-20	SUS440	100	35	50	17	HRC56°	1.2	2008-079
VSTV-25		160	62	80	29		4.4	2008-080

Electrode Vise

MINI TYPE
JAW WIDTH 25mm

VERTEX®
(ALLOY STEEL) FOR EDM

ELECTRODE HOLDERS FOR ELECTRO DISCHARGE MACHINE

Mini vise can be used in fixed electrode holders.
The opening with a cross V groove on the vise can do electric discharging both by vertical way and horizontal way for various-shape workieces.
The max. opening on the vise is 20 mm.
※ Not 100% magnetic proof

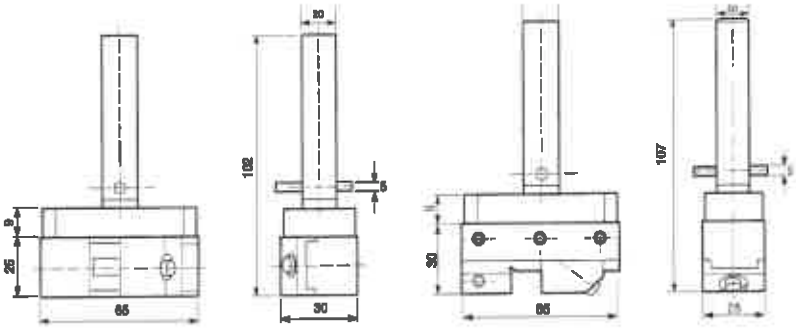

ORDER NO.	MATERIAL	LENGHT	WIDTH	JAW OPENING	JAW HEIGHT	HARDEN	WEIGHT (kgs)	CODE NO.
VEH-20	SKS	65	25	20	10	HRC 58°-60°	0.8	2008-001

Electrode Holder

FOR EDM

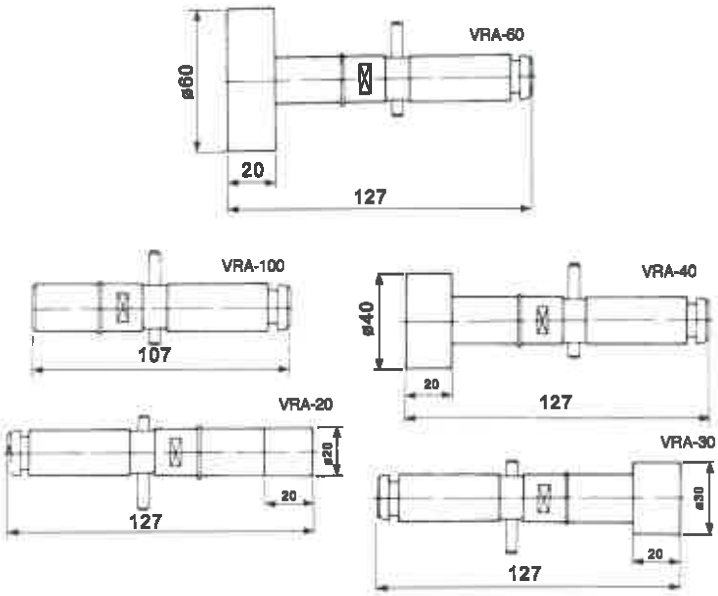

ORDER NO.	VRA-20	VRA-30	VRA-40	VRA-60	VRA-100
WEIGHT(KG)	0.2	0.4	0.5	0.9	0.3
CODE NO.	2008-010	2008-011	2008-012	2008-013	2008-014

EDM Wire (BRASS & COPPER) VERTEX®

Zinc COATING IS ALSO AVAILABLE

※FLOATING PRICE, CONTACT US BEFORE ORDERING.

FEATURES

CHEMICAL COMPOSITION

65/35 brass equivalent to Alloy No. JIS-H3260 C2700

NO ACID-CORROSION AND NO DAMAGE TO RESINS

The special treatment avoids acid-corrosion on machine and workpiece.

HIGH SURFACE QUALITY

The special treatment makes the wire surface smooth, free from dirt, rust and grease that causes unefficiency to electric discharge.

STANDARD WEIGHT CONTROL

By perfect control in process, we obtain the standard weight per coil that enables us to maintain the stability of processing time and the accuracy of drawing.

NO WELDMENT

The rough surface caused by welding could affect the quality and accuracy of performance. The welded wire tends to break that wastes the time to re-thread.

HIGH-DIMENSIONAL PRECISION

Wire diameter tolerance and roundness tolerance are both limited to 1/ μ m.

OUTSTANDING STRAIGHTNESS

Outstanding straightness ensures automatic threading successfully.

SPECIFICATION

ORDER NO.	WIRE TYPE	DIAMETER		DIAMETER TOLERANCE (mm)	BREAKING LOAD (kgs)	TENSILE STRENGTH (N/mm)	ELONGATION (%)	SUITFUL WORKING STYLE	CODE NO.
		Inch	mm						
VEW-20H	HEAD	0.008	0.20	±0.001	3.14	980 ≦	0.4 ≦	STRAIGHT CUTTING a.PASS CUTTING b.ROUGH CUTTING c.FINISH CUTTING	2009-003
VEW-25H		0.010	0.25		4.92				2009-004
VEW-30H		0.012	0.30		7.07				2009-005
VEW-20S	SOFT	0.008	0.20	±0.001	1.41	441 ≦	15 ≦	ANGLE CUTTING	2009-010
VEW-25S		0.010	0.25		2.21				2009-011
VEW-30S		0.012	0.30		3.18				2009-012

THE PACKIING USED A STANDARD COIL.
HERE SHOW 3 KINDS OF COIL PACKING TYPE FOR CHOICE. THE POPULAR IS P-5R (5kgs).

OTHER COIL TYPE, WEIGHT
WELL BE AVAILABLE.

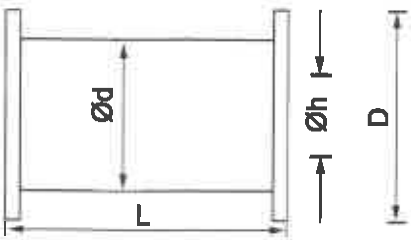

PACKING COIL TYPE	COIL SHAPE	WIGHT OF WIRE ON COIL (kg)	DIAME-THE OF WIRE (mm)	D (mm)	d (mm)	L (mm)	h (mm)	LENGTH OF WIRE ON COIL (M)	NUMBER OF COILS /BOX
P-5R		5	0.20 0.25 0.30 0.33	160	90	114	20	18314 11553 8001 6750	4

Wire Dies Guide

VERTEX®

Used to guide wire in wire electro-discharge machimes.

ORDER NO.	MAKER	APPLICATION	REMARKS	CODE NO.
M118	MITSUBISHI	SX, CX, FX Upper 上 (線切割眼模 M118)	C 834G	2009-030
M119		SX, CX, FX Lower 下 (線切割眼模 M119)	B 243G	2009-031
M103 Ø3		F, FL, G, Opening Ceramic Stainless (眼模螺絲 Stop screw M108)	D 162G	2009-032
M108			D 123G	2009-033
M111		G, H~HA, C, CR, (儒心座 Dies Holder M111)	X 184D226H01	2009-034
M117 Ø4		H1, HA, B, Z SK/AF Lower 下 (線切割眼模 M117)	B 176G	2009-035
M107		H1, HA, B, Z SK/AF Upper 上 (線切割眼模 M107)	B123G	2009-036
M120		H1, A, B, Z/AF Upper 上 (眼模螺絲 Stop screw M120)	C524G	2009-037
Z141		Ceramic Guides for Small Hole EDM machine (放電打孔機用導管 Z141)		2009-038
S103	ソデック SODICK	A300, 500, Aw330, 450 EPOC, AP, BF (線切割眼模 S103)	GUIDE (87-3)	2009-039
S111	SEIBE	F, K Upper & Lower (線切割眼模 S111)		2009-040
H102	HITACHI	H1-Cut 203, 304, 345, 460 Lower 下 (線切割眼模 H102)		2009-041
F120	フアナック FANUC	∞ °A, °B Upper 上 (線切割眼模 F120)		2009-042
F121		∞ °A, °B Lower 下 (線切割眼模 F121)		2009-043
F101 F102		O, P, Q, R, W Upper & Lower 上、下 (線切割眼模 F101, F102)		2009-044
F123		^{1}A, ^{1}B, Upper 上 (線切割眼模 F123) ^{1}A, ^{1}B, Lower 下 (線切割眼模 F124)		2009-045
F124				2009-046

Electrode (Copper & Brass Pipe Electrode)

VERTEX®

Used to guide wire in wire electro-discharge machimes.

STD. STYLE

SUPER 8 STYLE

- BRASS PIPE FOR STEEL & TREATMENT STEEL. COPPER PIPE FOR TUNGSTEN MATERIAL & SMALL HOLE.
- SUPER STYLE HOLE COPPER PIPE FOR HIGH SPEED MACHINNING & NON THROUGH HOLE.
- THE LENGTH 300MM OR 400MM OF PRICE IS SAME. PLEASE NOTIFY THE LENGTH WHEN YOU ORDERING.
- EAH UNIT PRICES IS 20 PCS.

ELECTRODE

STANDARD STYLE HOLE

MATERIAL \ HOLE DIA.		0.4	0.5	0.6	0.7	0.8	0.9	1.0	1.1	1.2	1.3
BRASS	ORDER NO.	VEB-04	VEB-05	VEB-06	VEB-07	VEB-08	VEB-09	VEB-10	VEB-11	VEB-12	VEB-13
	CODE NO.	2010-001	2010-002	2010-003	2010-004	2010-005	2010-006	2010-007	2010-008	2010-009	2010-010
COPPER	ORDER NO.	VEP-04	VEP-05	VEP-06	VEP-07	VEP-08	VEP-09	VEP-10	VEP-11	VEP-12	VEP-13
	CODE NO.	2010-030	2010-031	2010-032	2010-033	2010-034	2010-035	2010-036	2010-037	2010-038	2010-039

MATERIAL \ HOLE DIA.		1.4	1.5	1.6	1.7	1.8	1.9	2.0	2.1	2.2
BRASS	ORDER NO.	VEB-14	VEB-15	VEB-16	VEB-17	VEB-18	VEB-19	VEB-20	VEB-21	VEB-22
	CODE NO.	2010-011	2010-012	2010-013	2010-014	2010-015	2010-016	2010-017	2010-018	2010-019
COPPER	ORDER NO.	VEP-14	VEP-15	VEP-16	VEP-17	VEP-18	VEP-19	VEP-20	VEP-21	VEP-22
	CODE NO.	2010-040	2010-041	2010-042	2010-043	2010-044	2010-045	2010-046	2010-047	2010-048

SUPER 8 STYLE HOLE COPPER & BRASS PIPE ELECTRODE

MATERIAL \ HOLE DIA.	1.0	1.1	1.2	1.3	1.4	1.5	1.6	1.7
ORDER NO.	VES-10	VES-11	VES-12	VES-13	VES-14	VES-15	VES-16	VES-17
CODE NO.	2010-064	2010-065	2010-066	2010-067	2010-068	2010-069	2010-070	2010-071

MATERIAL \ HOLE DIA.	1.8	1.9	2.0	2.1	2.2	2.3	2.4	2.5
ORDER NO.	VES-18	VES-19	VES-20	VES-21	VES-22	VES-23	VES-24	VES-25
CODE NO.	2010-072	2010-073	2010-074	2010-075	2010-076	2010-077	2010-078	2010-079

EDM Filter For EDM (Oil)

Unit:mm

ORDER NO.	OUTER DIA.	INNER DIA.	LENGTH	SUITABLE MODELS	WEIGHT (kg)	CODE NO.
NH-01	150	72	450	SEIBU.JAPAX.SODICK.AMADA	1	2011-001
NH-09	150	33	360	CHARMILLES.AGIE.MITSUBISHI	0.8	2011-002
NH-09S	150	91	309		1.2	2011-003
NH-600L	150	26	600	WITH STEEL NET	1.2	2011-004

Angle Plate

VAP-1

VAP-2

VAP-3

90° V-way. High carbon steel hardened to 50°-54° HRC, precision ground to within 0.005mm accuracy in squareness. Angle tolerance ± 10 minutes. Sets any angle 0-60°, vernier reading 10 minutes. 2 set screws provided for firmlocking at fixed angle.
Material: SK2
Hardness: HRC 50°-54°
Squareness: ±0.01 mm
Angular measures from 0°-60°
※ Not for LAB

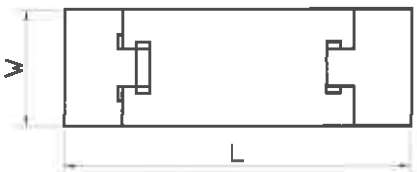

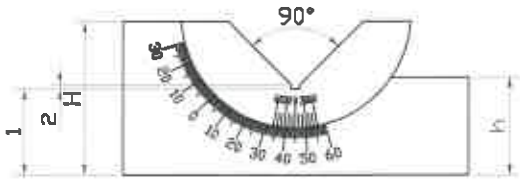

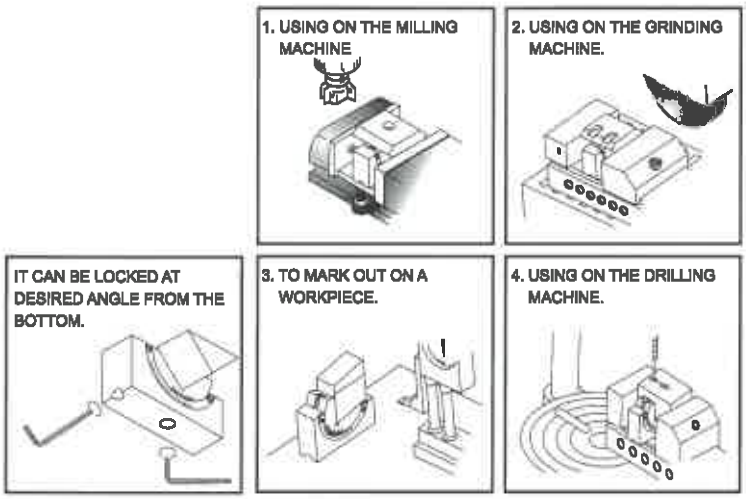

Unit:mm

ORDER NO.	H	W	L	h	N.W. (KGS)	CODE NO.
VAP-1	48	45	102	28	1.4	2005-001
VAP-2	49	30	102	28	0.9	2005-002
VAP-3	32.5	25	75	21	0.5	2005-003

Micro-Adjustable Angle Plate

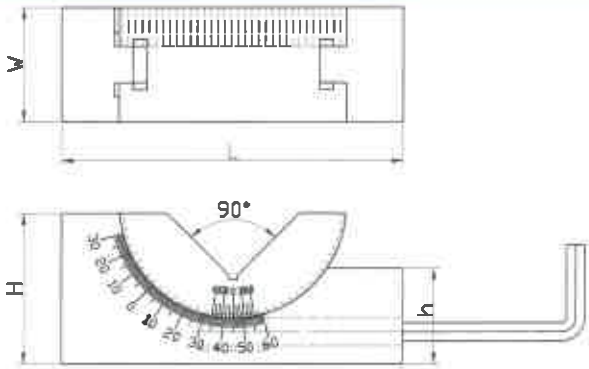

Angle Can Be Adjusted From 0°~60° By Screw
※ Not for LAB

Unit:mm

ORDER NO.	H	W	L	h	N.W. (KGS)	CODE NO.
VAPM-1	47	46	102	28	1.4	2005-010
VAPM-2	47	30	102	28	1	2005-011
VAPM-3	32	25	75	22	0.5	2005-012

Precision V Block

VERTEX®
PAIRS GROUNDED

Material : Steel
- For Production

※ Not for LAB

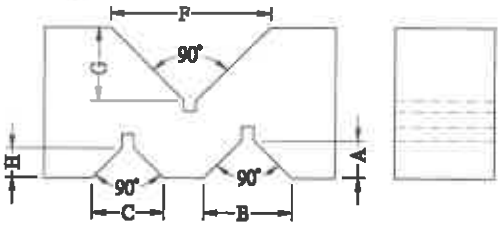

Unit:mm

ORDER NO.	A	B	C	F	G	H	L X W X H	WEIGHT (KGS)	CODE NO.
V-5VA	14	35	40	63	29	19	124X35X61	2.8	2005-017
V-3VA-S	10	22	18	40	18	8	72.8X25X36.7	0.88	2005-018
V-4VA-S	15	32	18	50	24	8	100X36X60	2.9	2005-019
V-5VA-S	16	35	22	65	31.5	9.5	124.6X49.8X79.8	6.8	2005-020

Precision Angle Blocks

ORDER NO.AB-130 CODE NO.2006-001

WEIGHT:1kg

Furnished In 1° increments to 5 degrees and in 5° increments to 30 degrees. With the addition of the optional $^1/_4$° and $^1/_2$°blocks virtually and conceivable angle to these increments can be established.

- Simple, quick angle set-ups.
- Eliminates calculations, avoids errors.
- Lightly magnetized for better holding.
- Manufactured of steel, hardened, stablized and ground.
- Sizes: 3" long x $^1/_4$"thick. (75mm x 6mm)
- Accuracy: .0001" per inch.
- Oil-hardened steel, precision ground. 12pcs angle blocks ($^1/_4$°,$^1/_2$°,1°,2°,3°,4°,5°,10°,15°,20°,25°,30°)

※ Not for LAB

Universal Angle Block Set

No sine plate, sine vise, angle chart or gauge block needed!

- A slope at any angle can be provided by installing a block or blocks on a machine vise up to 5%
- 8 pieces in a deluxe wooden box include: 10°,15° & 30° vee blocks and 5 angle plates-1° to 5° for AB-164
- Heat treated 50° HRC & ground to 10 sec.
- 9pcs angle blocks (1/2°,1°,2°,3°,4°,5°,10°,15°,30°,) for AB-163

※ Not for LAB

mm

ORDER NO.	L X W X H	WEIGHT (KGS)	CODE NO.
AB-163	Vee blocks:3"Lx1$^3/_{16}$"Wx1$^3/_{16}$"H Angle Plates:2$^3/_4$"Lx1$^3/_{16}$"Wx$^5/_{64}$"H	2	2006-010
AB-164	Vee blocks:4"Lx1$^1/_2$"Wx1$^1/_2$"H Angle Plates:4"Lx1$^1/_2$"Wx$^5/_{32}$"H	3.8	2006-011

Micrometric Tangent Bar & Angle Gauge Block Set

VERTEX®

ORDER NO.AB-166 CODE NO.2006-020

WEIGHT:1kg

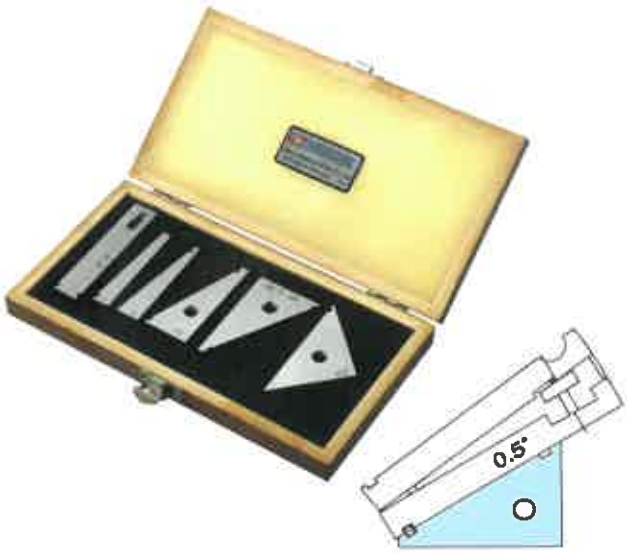

Micrometric Tangent Bar & Angle Gauge Block Set

- Made of Hardened Steel, Precision Ground.
- Accuracy ±.001″ Per Inch.
- Interlocking Slots.
- Size of Angle Blocks: .35″x3″
  A Complete set for Angular set-ups. No Other Gauges Required.
- Simplicity in application.
  Angular set-ups with this are a zip. Just dial your angle direct in degrees and minutes. Add one or two angle block gauges for angles over 5° and Secure assembly by dropping 1/8" dowel or square key into slot provided.
- Complete with fitted case.
- Hardness : HRC 50°

※ Not for LAB

Solid Angle Plates

ORDER NO.AB-167 CODE NO.2006-030

WEIGHT:0.3kg

Solid Angle Plates

- Precision ground angles for convenient set-ups in tooling, production and inspection.
- Four holes on top of it for easy mounting.
- 1/4″ Thick, packed in cardboard box.
- Set of 3″x3″x4-3/8″, 45°x45°x90°x1pc
  2″x3-15/32″x4″, 30°x60°x90°x1pc
- Hardness : HRC 50°

※ Not for LAB

Precision Angle Blocks

ORDER NO:AB-113(13PCS/SET) CODE NO:2006-040

WEIGHT:7.1kgs

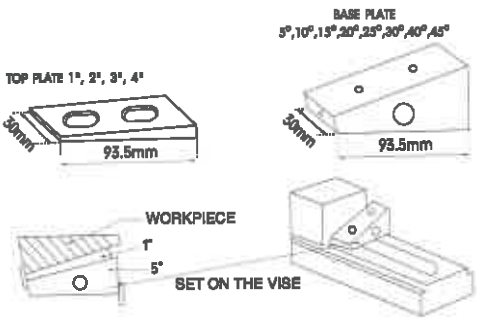

FEATURES

- Angle Tolerance:0.02Mm
- Can Be Assembled Top Plate With Base Plate For 6°-9°,16°-19°,26°-29°, 36°-39°,46°- 49°
- Harden Treatment Up To Hrc 55°
- Made By The Material Of Sk2
- Can Be Cooperate Two Set For Use.

※ Not for LAB

EXAMPLE FOR USE

PLATE	ANGLE DEGREE
TOP PLATE	1°,2°,3°,4°
BASE PLATE	5°,10°,15°,20°,25°,30°,35°,40°,45°

Hardened Steel Square

VERTEX®

Hardness : HRC50°

Squares have accurate right angles both inside and outside. Made from a single piece of fully tool steel. Beams and blades are ground and accurately lapped for straightness and parallelism. Blades are beveled on both edges of each side. Beam is grooved at inner corner for clearance of burr and dirt. All squares are fully hardened . Packed in indiviual cartons. Accuracy 0.02mm.

※ Not for LAB

ORDER NO.	L x H x thick	NEW WEIGHT (KGS)	CODE NO.
SS-304	100X75X8MM	0.3	2006-050
SS-306	100X150X8MM	0.6	2006-051
SS-308	130X200X8MM	0.8	2006-052
SS-310	250X160X10MM	1.4	2006-053
SS-312	300X200X12MM	2.2	2006-054

Square

Alloysteel Grounded HRC50° ± 2

※ Not for LAB

ORDER NO.	LxHxthick	ACCURACY	WEIGHT(kg)	CODE.NO.
FS-204	100x75x6mm	0.02mm	0.2	2006-055
FS-206	150x100x6mm		0.3	2006-056
FS-208	200x130x6mm		0.5	2006-057

Precision Steel Angle Plate

HIGH PRECISION TYPE

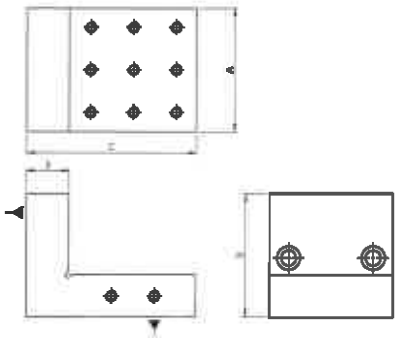

ORDER NO.	A	B	C	D	N.W (KGS)	CODE NO.
VRS-33	3″ 75	3″ 75	4″ 100	1″ 25	2.2	2006-060
VRS-44	4″ 100	4″ 100	4″ 100	1″ 25	3.7	2006-061
VRS-46	4″ 100	4″ 100	6″ 150	1″ 25	4.5	2006-062
VRS-85	8″ 200	120	8″ 200	40	14.3	2006-063
VRS-1206	12″ 300	6″ 150	12″ 300	2″ 50	32.3	2006-064

MATERIAL : YK30 ALLOY STEEL
ACCURACY : 0.005/100MM
HARDEN TREATMENT UP TO HRC 58°
※ Not for LAB

V-Block With Clamp

PAIRS
VBC-196
VBC-197

PAIRS
VBC-195

(II)

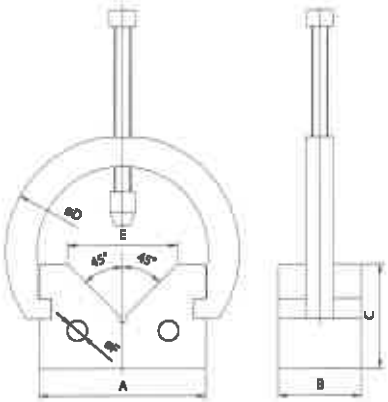

(I)

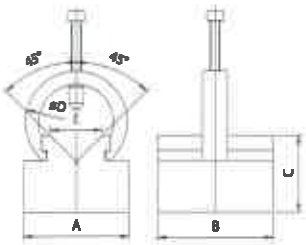

- Two V blocks and two clamps are include in the set.
- Made of hardened tool steel machined & ground in pairs close tolerances.
- A precision set for toolmakers & machinists.

※ Not for LAB

ORDER NO.		A	B	C	D	E	F	N.W. (kgs)	CODE.NO.
VBC-195	I	63	70	46	61	31		3.1	2007-001
VBC-196	II	100	50	63	140	66	12	5.9	2007-002
VBC-197	III	150	64	100	193	110	12	14.7	2007-003

V-Block With Clamp

VERTEX®

Alloysteel Grounded HRC50°

PAIRS
VBC-003

PAIRS

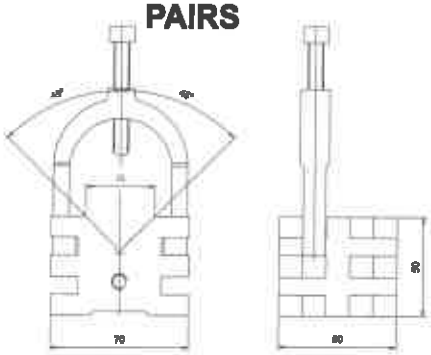

PAIRS
VBC-243

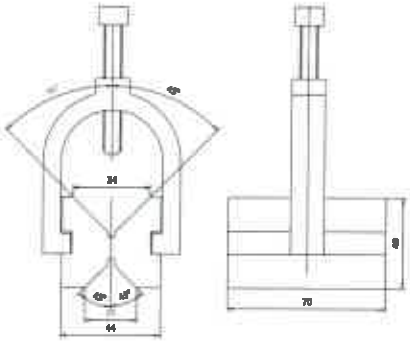

PAIRS
VBC-006

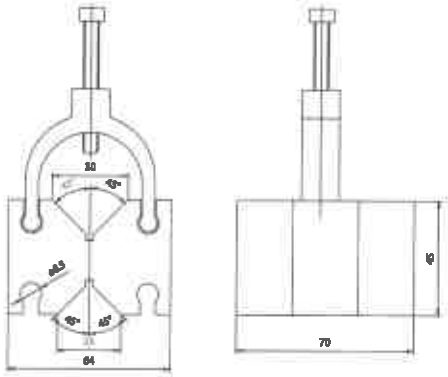

SINGLE
VBC-009

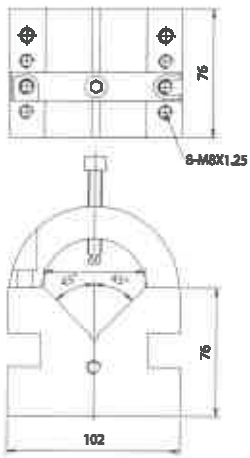

ORDER NO.	W	H	L	W.OF SMALL VEE	W.OF LARGER VEE	PACKING	G.W. (kgs)	CODE NO.
VBC-003	2.36 60mm	1.86 50mm	2.75 70mm	NON	V35 X V5.5	110x80x110mm	2.4	2007-010
VBC-243	2 3/4 70mm	1 3/4 45mm	1 5/8 42mm	NON	V32 X V3.5	75x80x100mm	1.9	2007-020
VBC-006	2 1/2 64mm	1 3/4 45mm	2 3/4 70mm	V25 X V3.5	V30 X V3.5	110x80x110mm	2.6	2007-030
VBC-009	4 102mm	3 76mm	3 76mm	NON	V59 X V4.5	70x50x110mm	3.9	2007-040

Tangimatic Dresser

ORDER NO.V-TDA CODE NO.2012-001

WEIGHT: 7 kgs

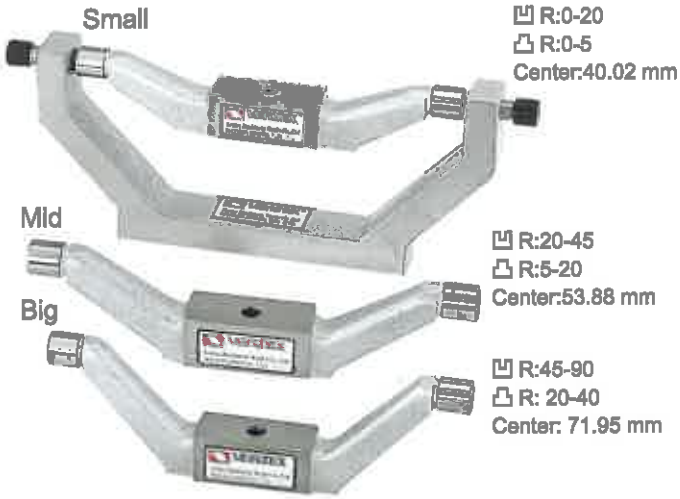

The dresser can be dressing any concave and convex of grinding wheel < Ø205 mm
Concave R: 0-40R (mm)
Convex R: 0-90R (mm)
Max. wheel DIA.: 8"(200 mm)
Diamond dresser pen 10 mm

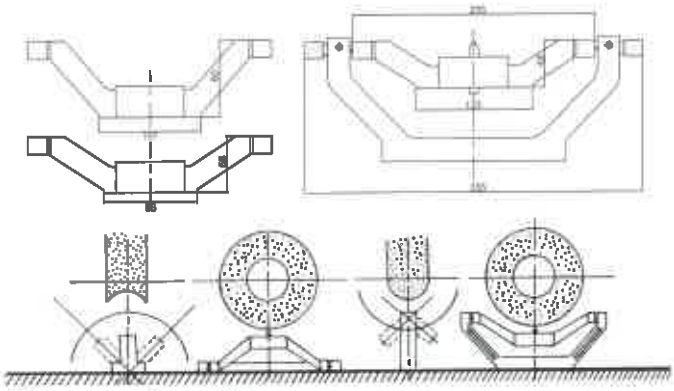

Tangimatic Dresser Handy Type

ORDER NO.V-TDH CODE NO.2012-002

WEIGHT:4.5 kgs

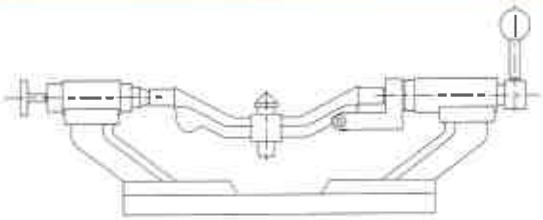

The dresser can be dressing any concave and convex of grinding wheel
Convex R: 0.2-20 (mm)
Concave R: 0.2-25 (mm)
For wheel <Ø205 mm

Radius And Angle Dresser

ORDER NO.V-TDB CODE NO.2012-010

WEIGHT:11.5 kgs

Convex dressing range: 0.8R-40R
Concave dressing range: 0-40R
Max. wheel dressing diameter: 250 mm
Max. wheel extending diameter: 375 mm

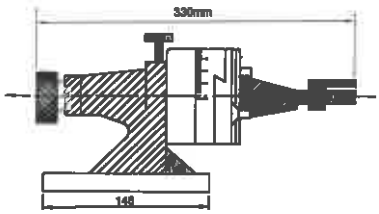

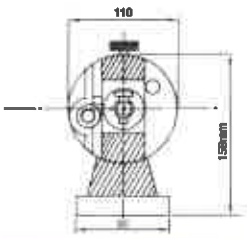

- Positive setting of the diamond to absolute center with the special gage included with the dresser.
- Simple, fast, accurate radius setting; no height gage or other set-up aids required. Radius is set on the grinder by measuring over the two pins or by inserting a gage block, as shown, for direct reading. Inside or outside radius is determined simply by sliding the dowel pin to the right for concave and to the left for convex.
- 4x90° gaduation in full 360° circle. 6 Minute vernier reading. Chrome plated.
- One push-pull type knob for radius and angle control and for safer and faster operations.
- ACCURACY. Exteremely close tolerances are held in the manufacture of this tool, assured by hardening and precision grinding of all critical parts. Ways are chrome hardened.
- ECONOMY. Set-up and dressing time reduced to a bare minimum due to simplicity.

Universal Wheel Dresser

ORDER NO.V-TDC CODE NO.2012-020

WEIGHT:7.8kgs

The wheel dresser that dresses two angles tangent to a radius in one continuous motion with .0001~0.0002mm accuracy.
The wheel dresser with a micrometer feed-0.98"(25mm) travel.

SIMPLE-ELIMINATES HEIGHLY SKILLED OPERATORS
Fluidmotion means YOU CAN dress two angles tangent to a radius in one continuous motion-with only one setting. The diamond automatically returns to center position after dressing angles. Thus even a beginner can dress complex froms quickly and accurately. (center height 195mm)

ELIMINATES ELABORATE SETUPS
No need to pre-set diamond, or use any other tool except a micrometer and a simple hex wrench.
No Gage block-Master Gage setting or Block-Parallel Bar-Surface Plate-Height Gage-Dial Indicator.
No movement of dovetails necssary to form angles. The angle is dressed by continuing to push handle in both directions after radius is formed.
No need to use Gibs & V-Ways other than positioning surfaces.

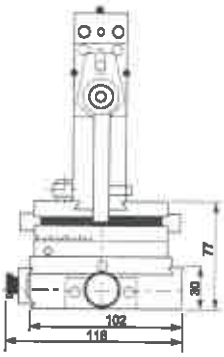

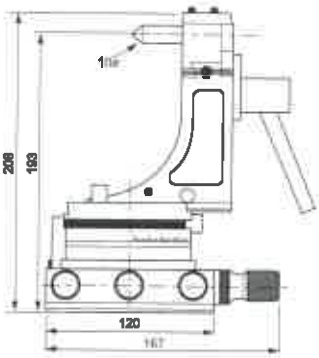

ACCURATE-RAPID, REPAT FORM-DRESSING
Fluidmotion generates clean, precise wheel profiles entirely free of chatter marks. Without fluidmotion a perfect blend of angles and radius is improbable.

PRECISE SHARP CONTOURS-concave or convex, at a full 180 degrees, are obtained consistently with (GUARANTEED) 0.001" accuracy.

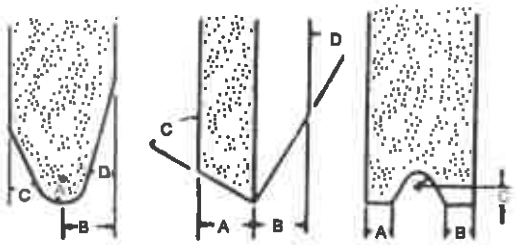

CONVEX RANGE-0R-76.2R
CONCAVE RANGE-0.8R-88.9R
ACCURATE...FLUIDMOTION...PRECISE...
HOLD INTERSECTING ANGLES 12 to 15 seconds. This is accomplished by operating upright and handle.
Setting up two angles requires 10 seconds. Setting two angles and radius requires less than 3 minutes.

THE MOST DURABLE DRESSER AVAILABLE
Manufactured from hardened, ground and lapped alloy steels.
No wearing surfaces. Swivels on sealed bearings.
This form tangent in one setting-two angles-two radius-one flat.
MAX. Swing distance of diamond cutter.....±14mm
Measuring guasi-pin dia.....ø10
MAX. Wheel dia.....ø200mm
Reading accuracy of turret index.....5'
Feed per division of handle scale.....0.01mm

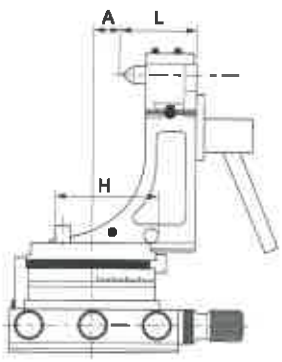

Calculation Methond
To dress convex arc surface: H=L + R
To dress concave arc surface: H=L +(-R)
H: Distance between outer generating lines of two locating pins.
R: Radius of the arc surface to be dressed
L: Distance from tip of diamond cutter to base plate

Precision Duplex Dresser

VERTEX®

ORDER NO.V-TDF CODE NO.2012-030

WEIGHT:3.7 kgs

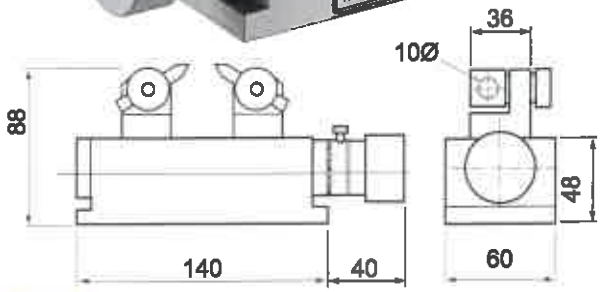

FEATURES

PRECISION DUPLEX DRESSER is designed to simultaneously dress both sides of a grinding wheel, precisely and without deformation.
It is useful for the thining of grinding wheels or the dressing of thin wheels. manufactured of tool steel and hardened through out to HRC 60 for life time use.

Specifications:

Max. width of wheel.....40 mm (1-9/16")
Max. dressing depth.....40 mm (1-9/16")
Mini dressing width.....0.2 mm (0.0079")
Graduation.....0.02 mm (0.0001")

Max.thickness	Min.	Max.	Min
40mm	0.2mm	40mm	0.02mm/div

Radius And Angle Dresser

ORDER NO.V-TDG CODE NO.2012-040

WEIGHT:12 kgs

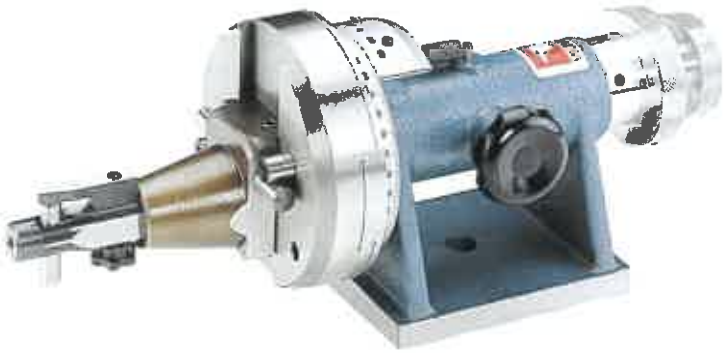

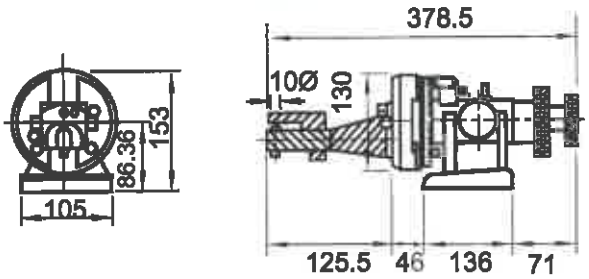

FEATURES

- 6 minute vernier reading.
- 5-1/2" long x 6-1/2" high.
- Dual purpose knob for drum & angle movement.
- Stop for concave and convex radius.
- Comes with setting gage for diamond tool.
- 凹 R CONCAVE = 150 mm
- 凸 CONVEX = 60 mm
- MAX. Wheel Dia = 279.4 mm
- Left & Right Stroke = 90 mm

Specifications:
Max. wheel diameter, standard.....11"
Concave radius with standard diamonds.....0-2 1/4"
Concave radius with rta-tall diamonds.....0-2 1/4"
Convex radius.....0-4"
Tangent travel in either direction.....1.950"
Center line.....3.4"

Radius And Angle Dresser

ORDER NO.V-TDE CODE NO.2012-050

WEIGHT:9.2 kgs

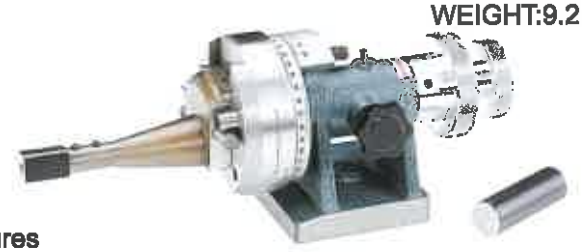

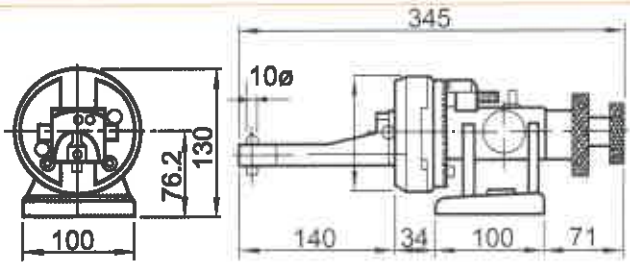

Features

- No height gauge or set-up aids required.
- Radius is set on the grinder by measuring over the two pins or by inserting a gauge block for direct reading.
- Concave radius or Convex radius is determined by using either the left or right hand pins.
- Radius = Set the DRESSER on surface grinder measuring by the 2 pins and / or inserting gauge block for direct reading.

Grinding wheel dressing application

- 凹 R CONCAVE = 100 mm
- 凸 CONVEX = 45 mm
- Left & Right Stroke = 65 mm

Optical Radius Angle Dresser

VERTEX

ORDER NO.V-TDT CODE NO.2012-060

WEIGHT:4.3 kgs

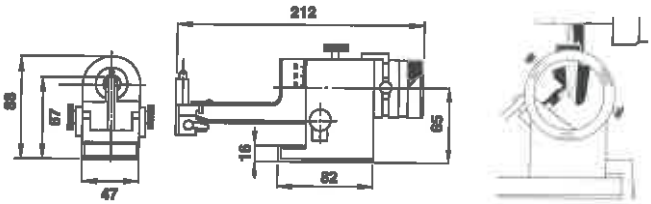

Features

Universal Wheel Dresser Is Adoptable on Surface grinder and universal tool grinder for dressing grinding wheel into various cross sections of flat or curved shapes.
By "SIGHTING" the diamond point through the lens, radius and angles can easily be made perfectly tangent Visu ally Even with diamonds. Likewise radius can be blended together with most unbelievable accuracy.

Specification

Center height.....65 mm
Max. wheel diameter.....200 mm
Max. convex radius.....10 mm
Max. concave radius.....25.4 mm
Dressing angle.....95°-0°-95°
Tangential travel.....Appo x 22.5 mm

Grinding wheel dressing application

Matco Sine Dresser

ORDER NO.VP-50 CODE NO.2012-070

WEIGHT:2.5 kgs

- This fine precision-made unit dresses grinding wheels to any angle from 0°-60° degrees with new smoothness and accuracy.
- The cross feed up to 50mm, center distance 0.01 mm, Sine angle absolutely accurate.

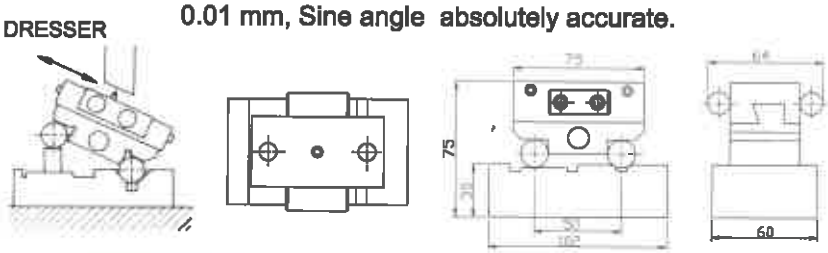

SPECIFICATION

BLOCK CENTER DISTANCE	CENTER TOLERANCE	MAX CROSS FEED
50	±0.01	50

Matco Sine Dresser

ORDER NO.V-50D CODE NO.2012-080

WEIGHT:1.6 kgs

This fine precision-made unit dresses grinding wheels to any angle from 0°-60° degrees with new smoothness and accuracy.
The cross feed up to 50 mm, center distance 0.01 mm, Sine angle absolutely accurate.

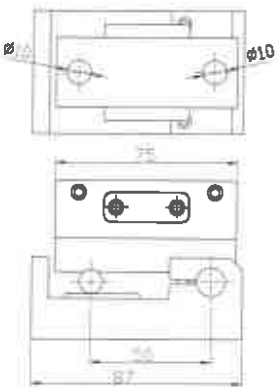

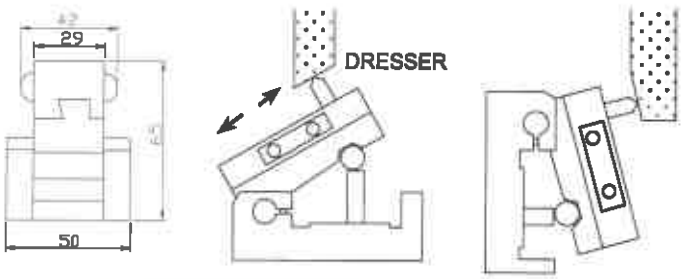

Diamond Wheel Dresser

ORDER NO.V-TDD **CODE NO.2012-090**

WEIGHT:4.6 kgs

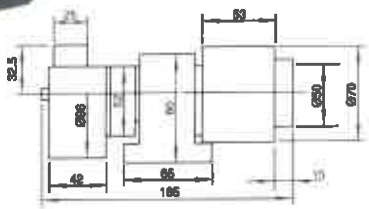

This device is suitablly used for Diamond Grinding wheel.
The surface is treated with blaze-dried lacquer.
Axis part is fixed with shaft bearing and can be rotated in high speed & with great precision.

- Sand wheel size: Ø75 x 26 x 12.7 ØWA80

※ No motor

Motor Type CBN Flat Wheel Dresser

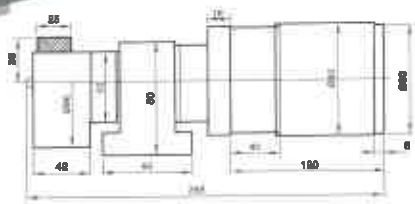

Unit: mm

ORDER NO.	VOLTAGE	RPM	WEIGHT (kgs)	CODE NO.
V-TDM-1	110V	129	6.5	2012-100
V-TDM-2	220V	108	7.1	2012-101

5.5KGS, SINGLE PHASE 0.07HP

SAND WHEEL SIZE: Ø75 x 25 x 12.7 ØWA80

Parallel Wheel Dresser

ORDER NO.V-TDP **CODE NO.2012-106**

WEIGHT:7.7kgs

NEW

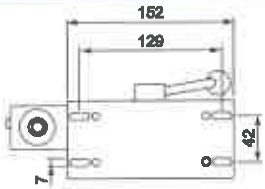

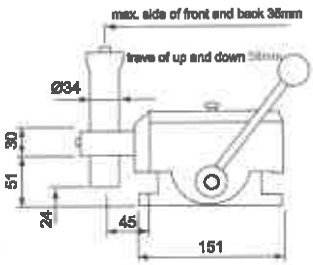

- Smallest feed scale : 0.01 mm
- Slide movement 35 mm
- Axial movement 58 mm
- For dress / fix the flat shape grinding wheel.
- Heat hardened, HRC 58°
- Smooth movement

Accessory :

- Diamond pen : Ø10 x 35ℓ x 1
- Hex. spanner 5 mm x 1

Wheel Hanger

ORDER NO.VWH-24, VWH-32 **CODE NO.2013-001, 2013-002**

WEIGHT:23.1 kgs

VWH-24
(24 pcs)

VWH-32 (32 pcs)
653W x 600D x 1460H mm
(excl. wheel height)

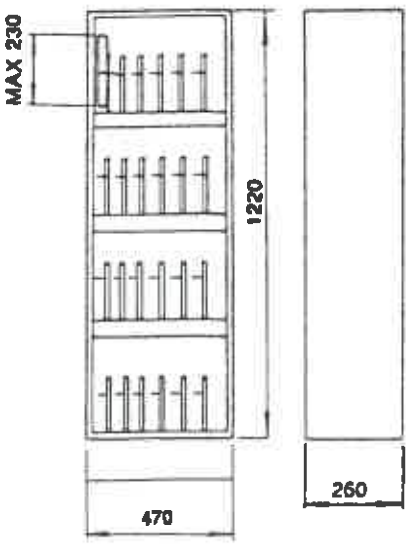

Grinding Wheel Flange

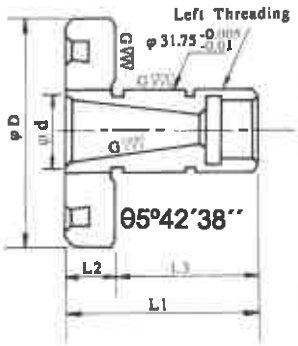

Unit: mm

ORDER NO.	ØD	Ød	L1	L2	L3	Brand Mark	WEIGHT (kg)	CODE NO.
FKT-250	78	25.7+0 -0.05	40	13	27	KENT PROTH	0.8	2013-010
FTA-350	75	25.4+0 -0.05	40	13	34	TA TUNG	1	2013-011

Wheel Balancing Stand

ORDER NO.WBS-300 CODE NO.2014-001

WEIGHT:12.5 kgs

MAX.WHEEL DIAMETER ALLOWED Ø 500mm

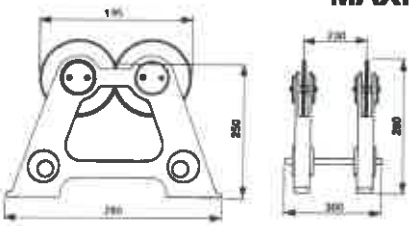

The stand is specifically designed to improve accuracy and longer life for grinding. It is finished with cast iron and fine through hardened to HRC 55°.

Level Balancing Stand

ORDER NO.LBS-100
CODE NO.2014-010
WEIGHT:8.8 kgs

ORDER NO.LBS-350
CODE NO.2014-011
WEIGHT:15.1 kgs

( )For LBS-350

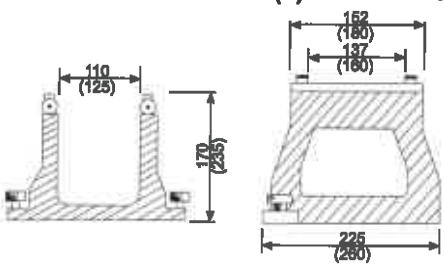

This machine encloses minute leveling instrument.
The adjustment of horizontal enable rapidly and accurately.
MAX.WHEEL DIAMETER ALLOWED Ø200 mm, Ø350 mm

Driving Carrier

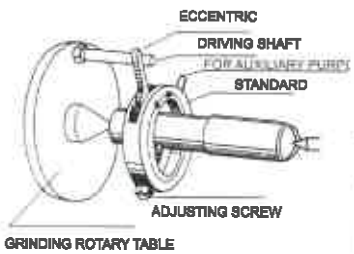

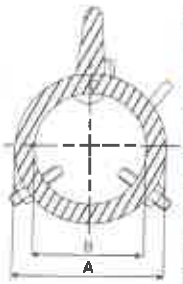

ORDER NO	CAPACITY	A	B	WEIGHT (kg)	CODE NO.
VDC-13	Ø6~Ø14	36	18	0.1	2014-020
VDC-22	Ø13~Ø24	48	28	0.2	2014-021
VDC-30	Ø20~Ø33	58	38	0.2	2014-022
VDC-40	Ø31~Ø42	68	48	0.2	2014-023
VDC-50	Ø36~Ø50	78	58	0.3	2014-024
VDC-60	Ø40~Ø62	89	68	0.3	2014-025
VDC-80	Ø60~Ø80	119	88	0.6	2014-026
VDC-100	Ø80~Ø100	140	109	0.7	2014-027

FEATURES:

- SUITABLE FOR GRINDING OF SHAFTS.
- EASY ATTACH AND DETACH BY ONE HAND.

Sine Plates

Design by the principles of SINE, angle grinding can be done well. High precision of parallelism within 0.002 mm and squareness within 0.005 mm. Setup and dressing time reduced to a bare minimum due to simplicity.(ANGLE 0° - 46°)

- Made of quality steel, hardened to HRC 55° - 56°
- Two hardened and ground side rails and one.
- Locking strap included.

GAUGE BLOCK
page B76

EXAMPLE

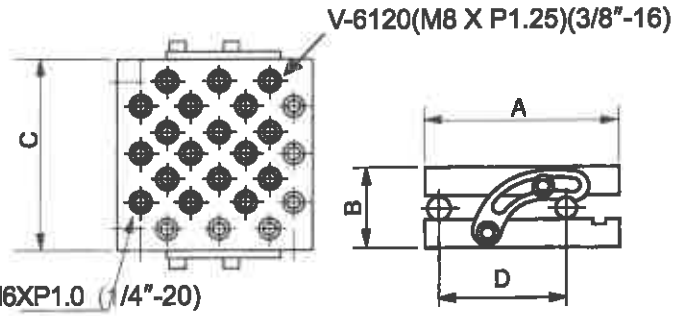

ORDER NO.	A	B	C	D	N.W (kgs)	CODE NO.
V-47	98	66	177	75	8.4	2015-001
V-66	150	62	150	100	9.4	2015-002
V-6120	147	65	300	100	19.8	2015-003

Compound Sine Plate

Made of quality steel, hardened to HRC 55°-62°,angles 0°~60° capacity.
Minute angle step 0.2 built into the front gauge block roll eliminates steps in base plate.
Two end rails and one locking strap included
Tapped holes on the top.
Center distance of tools with 0.005 mm(0.0001")
V-612S within 0.008 mm(0.0003")

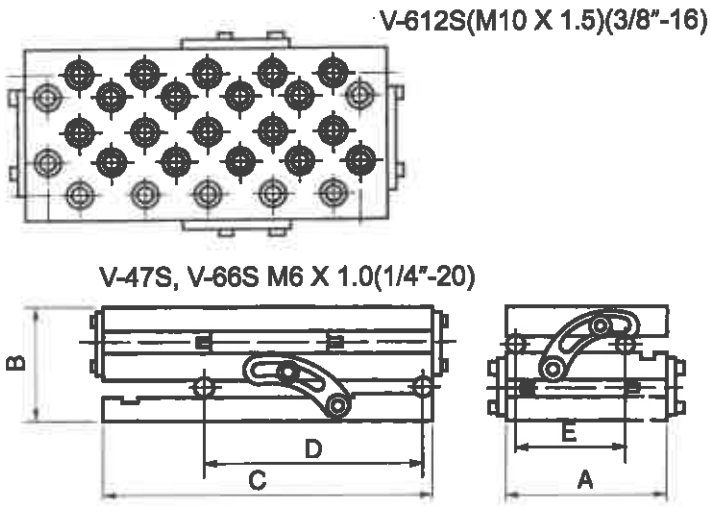

ORDER NO.	A	B	C	D	E	N.W (kgs)	CODE NO.
V-47S	100	100	175	125	75	9.9	2015-010
V-66S	150	100	150	100	100	12.4	2015-011
V-612S	150	100	300	100	100	23.7	2015-012

Magnetic Sine Plate

VERTEX®

650 GAUSS

MAGNETIC SINE PLATES with a permanent magnetic, never lose its strong power by press down a screw based on the plate and regain the original after work.

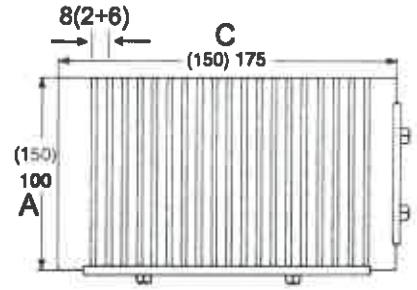

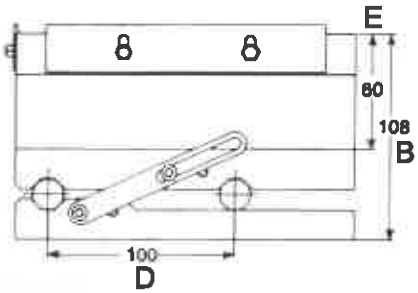

ORDER NO.	A	B	C	D	E	ANGLE	N.W (kgs)	CODE NO.
V-47M	100	108	175	100	60	0°~45°	11.3	2015-020
V-66M	150	108	150	100	60	0°~45°	15.6	2015-021
V-612M	150	108	300	100	60	0°~45°	27	2015-022

Magnetic Sine Plate With Fine Pole

700 GAUSS

Permanent magnetic chuck. Removable handle for positive on/off control, side rails, end rails all included. All have 200 minute angle steps with 0.005 mm(0.0002") tolerance in squareness,parallelism and roll center distances. The chuck of pole is 1+1.5

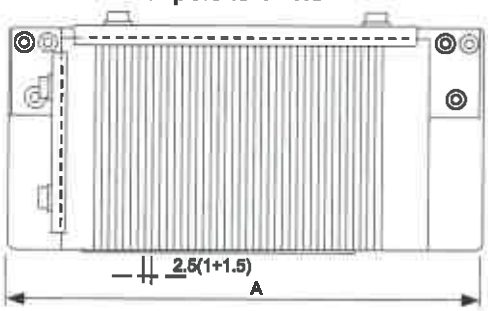

GAUGE BLOCK
page B76

SET UP EXAMPLE

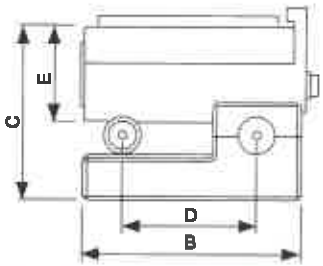

ORDER NO.	A	B	C	D	E	P	ANGLE	N.W (kgs)	CODE NO.
V-47MF	225	102	87	75	47	2.5 (1+1.5)	0°~46°	13.1	2015-030
V-66MF	200	152	87	100	47			16.5	2015-031
V-612MF	366	152	87	100	47			30.3	2015-032

Adjustable Sine Plate With Fine Pole Magnetic Chuck

VERTEX®

700 GAUSS

ORDER NO.V-66SA CODE NO.2015-050

WEIGHT:17.9 kgs

GAUGE BLOCK
page B76

EXAMPLE

The sine plate with magnetic chuck is with high accuracy and stability. From 0° to 60° can be used for angle, the precision is within 0.003 mm.

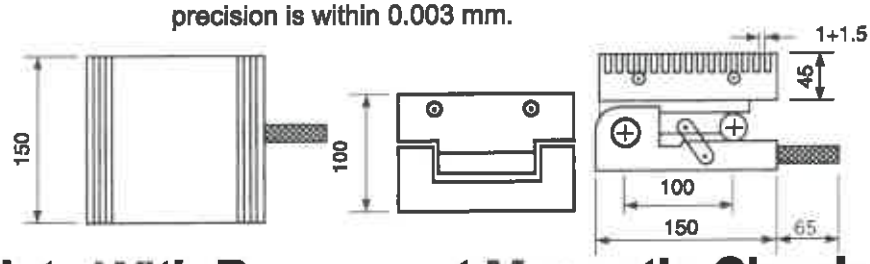

Double Way Sine Plate With Permanent Magnetic Chuck

690 GAUSS

FEATURES:

- Double way sine plate, can be use to grind two way angle at same time.
- Constructed of hardened alloy tool steel.
- Precise angle setting is obtained with gauge block.
- This device provides positive locking at any angle without distortion.
- A positive locking device is mounted on the base.

Unit:mm

ORDER NO.	A	B	C	D	E	P	ANGLE	N.W (kgs)	CODE NO.
V-47MS	100	142	175	100	75	1+3	0°~60°	15.2	2015-060
V-66MS	150	142	150	100	100			18.1	2015-061
V-612MS	150	142	300	200	100			34.7	2015-062

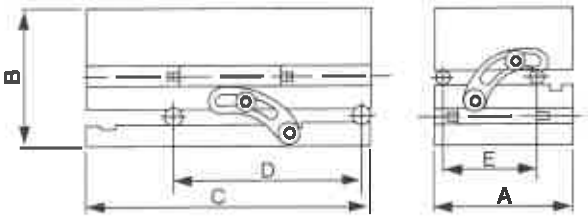

Double Way Sine Plate With Fine Pole Magnetic Chuck

700 GAUSS

FEATURES:

- Double way sine plate, can be grind two way angle at same time.
- Special feature with micropitch magnetic chuck, can fix tiny parts firmly on the chuck.
- Constructed of hardened alloy tool steel.
- Precise angle setting is obtained with gauge block.
- This device provides positive locking at any angle without distortion.
- A positive locking device is mounted on the base.

Unit:mm

ORDER NO.	A	B	C	D	E	P	ANGLE	N.W (kgs)	CODE NO.
V-47MSF	100	122	175	100	75	2.5 (1+1.5)	0°~60°	14.9	2015-070
V-66MSF	150	122	150	100	100			19.8	2015-071
V-612MSF	150	122	300	200	100			35	2015-072

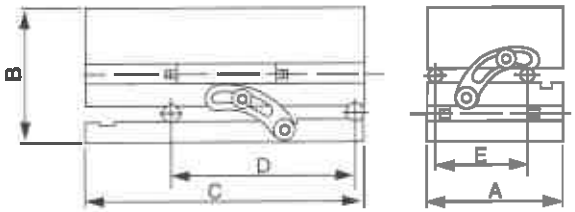

Rotary Permanent Magnetic Plate

650 GAUSS

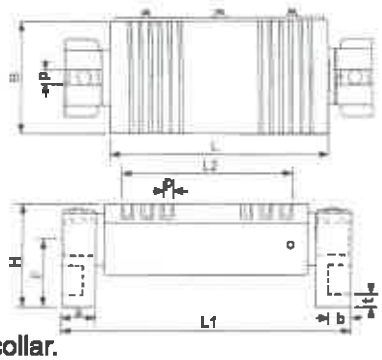

- Can grind the (0°-90°) angle work-piece, could be easily set by graduated collar.

Unit:mm

ORDER NO.	SIZE	OPERATION PLANE			POLE PITCH	ROTARY SEAT PLANE						HEIGHT	WEIGHT	CODE NO.
		B	L	L2	P	a	b	t	F	L1	d	H	KGS	
VLU-510B	125x250	125	250	191	8(2+6)	50	35	17	96	380	16	150	33.2	2015-080
VLU-612B	150x300	150	300	245						430			44.5	2015-081
VLU-618B	150x450	150	450	414			27	15	90	565	-	145	43	2015-082

Rotary Fine Pole Permanent Magnetic Plate

550 GAUSS

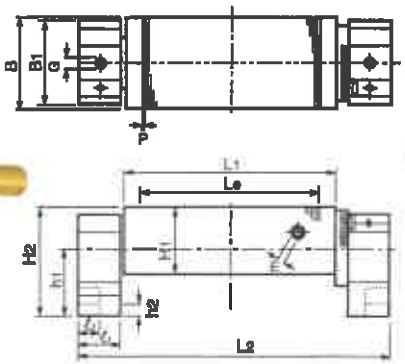

APPLICATION

Suitable for (0°-90°) angle grinding on ginder.

FEATURES

- Rotary shaft with graduation makes it easy to grind at any angle.
- Integrated molding of machine body and rotary spindle.
- Unchanged surface accuracy during ON/OFF change over.
- Design for distance between both magnets enables machining of various unconfirm in thickness & sizes.

Unit:mm

ORDER NO.	Nominal Dimension	Chuck Dimension				POLE PITCH	Length	Rotary Base						HEIGHT	WEIGHT (kgs)	CODE NO.
		B	L1	L2	H1	P	L2	B	d1	d2	G	h1	h2	H2		
VLU-407BF	100X175	100	175	125	78	2.5 (1+1.5)	293	100	50	25	16	103	50	145	19	2015-090
VLU-510BF	125X250	125	250	200			368								27	2015-091
VLU-612BF	150X300	150	300	246			418								31	2015-092
VLU-614BF	150X350		350	296			468								37	2015-093
VLU-618BF	150X450		450	396			568								43	2015-094

Hi-Power Mini Type Permanent Magnetic Plate

2200 Gauss

FOR CARBIDE MATERIAL ONLY
CAN NOT FOR ALL STEEL

APPLICATION

This chuck is designed for objects with weaker magnetic force.This chuck can be placed in the plate of large permanent magnetic chuck or electro-magnetic chuck for attraction or attachment.

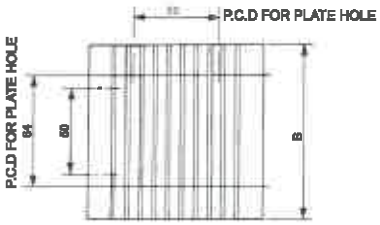

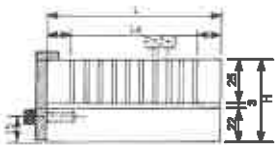

NO ON/OFF SWITCH

Unit:mm

ORDER NO.	DIMENSION	CHUCKING SIZE			POLE PITCH	HEIGHT	TESTING BLOCK	WEIGHT (kgs)	CODE NO.
		B	L	Le	P	H			
VG-404H	100X100	100	100	72	5(2+3)	50	□ 50x25t TEST BLOCK(TUNGSTEN) 210N(21kgf)	4	2015-100
VG-407H	100X180	100	180	152	5(2+3)	50		7	2015-101
VG-410H	100X250	100	250	222	5(2+3)	50		10	2015-102

Angular Permanent Magnetic Plate

650 GAUSS

SIDE MAGNETIC FORCE 18KGF

PLATE CENTER 26 KGF

TESTING BLOCK
□25X25X20mm
BLOCK (TUNGSTEN)

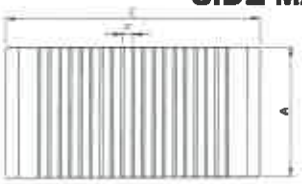

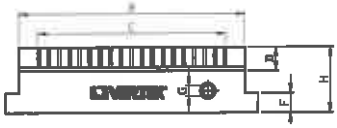

(2+6)
Sult for work piece thickness≥3mm length≥25mm
Mag. force : 650 GS
Good for workpiece bigger in lenght & width

- Permanent magnetic for ce.
- Well operation, specially treated, nondeformation and high precision.

Unit:mm

ORDER NO.	SIZE	CHUCKING SIZE				POLE PITCH	CHUCK MOUNTING FACE			SWITCH TYPE	HEIGHT H	WEIGHT KGS	CODE NO.
		A	B	C	D	P	G	E	F				
VG-407	100x175	100	175	146				187				7.2	2015-110
VG-510	125x250	125	250	206				262				15	2015-111
VG-612	150x300		300	256				318				18.5	2015-112
VG-614	150x350	150	350	306				368				20.9	2015-113
VG-618	150x450		450	406				468				27.5	2015-114
VG-816	200x400		400	365	20	8(2+6)	8	418	15	LIVING HEXAGON SOCKET SCREW KEYS	50	32	2015-115
VG-818	200x450	200	450	406				468				36.3	2015-116
VG-820	200x500		500	456				518				40.4	2015-117
VG-824	200x600		600	556				620				48	2015-118
VG-1020	250x500	250	500	456				518				50.3	2015-119
VG-606	150x150	150	150	116				162				9	2015-121
VG-1224	300x600	300	600	550	18			620			48	73.5	2015-122

Middle Pitch Permanent Magnetic Chuck

600 GAUSS

SIDE MAGNETIC FORCE 19KGF

PLATE CENTER 28 KGF

TESTING BLOCK
□25X25X20mm
BLOCK (TUNGSTEN)

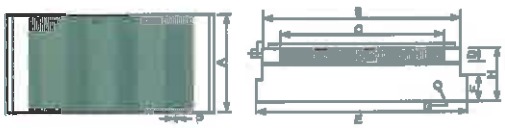

(2+6)
Sult for work piece thickness≥3mm length≥25mm
Mag. force : 600 GS
Good for workpiece bigger in lenght & width

APPLICATION

New type of think chuck, in 50mm thickness, for grinding and electrodischarging works, for thin plate or small works, in wide range of applications, it features a wide effective magnetic area on the chucking face.

FEATURES

- Thin and light to meet versatile applications.
- Fine-pitched magnetic poles, on this model,make it ideally suitable for small and thin works.
- Hexagonal wrench key is used for the magnetic ON/OFF change over handle it is inserted through the side easily removed and operates quite lightly.
- The chuck surface has a wider effective mgnetic area than other chucks of similar type.

B TYPE

BS TYPE

Unit:mm

ORDER NO.	DIMENSION	CHUCKING SIZE				POLE PITCH	CHUCK MOUNTING FACE			HEIGHT	HEXAGONAL HANDLE HOLE	WEIGHT KGS	CODE NO.
		A	B	C	D	P	A	E	F	H	G	N.W.	
VGF-1018B	100X175	100	175	146	18	5(1+4)	100	195	15	50	8	7.7	2015-160
VGF-1515B	150X150	150	150	116	18	5(1+4)	150	175	15	50	8	10	2015-161
VGF-1530B	150X300	150	300	256	18	5(1+4)	150	320	15	50	8	18.8	2015-162
VGF-1535B	150X350	150	350	306	18	5(1+4)	150	370	15	50	8	21.6	2015-163
VGF-1540B	150X400	150	400	356	18	5(1+4)	150	420	15	50	8	25	2015-164A
VGF-1545B	150X450	150	450	406	18	5(1+4)	150	470	15	50	8	27.4	2015-164
VGF-2040B	200X400	200	400	356	18	5(1+4)	200	420	15	50	8	32.3	2015-165
VGF-2045B	200X450	200	450	406	18	5(1+4)	200	470	15	50	8	36.3	2015-166
VGF-1018BS	100X175	100	175	146	18	5(1+4)	100	175	15	50	8	8	2015-167
VGF-1515BS	150X150	150	150	121	18	5(1+4)	150	150	15	50	8	9	2015-168
VGF-1530BS	150X300	150	300	256	18	5(1+4)	150	300	15	50	8	20	2015-169

Fine Pole Magnetic Plate

VERTEX®

SIDE MAGNETIC FORCE 21KGF
PLATE CENTER 30 KGF
550 GAUSS

A TYPE

(1+1.5)
Suit for work piece thickness≤2mm, length≥25mm
Mag. force : 550 GS.

S TYPE

Good for workpiece smaller in lenght & width

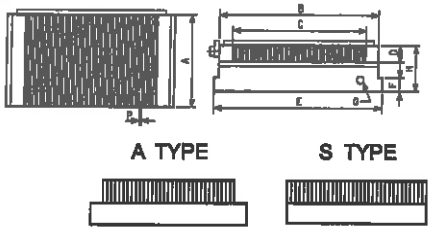

TESTING BLOCK
□25X25X20mm
BLOCK (TUNGSTEN)

FEATURES

Thin and light weight to meet versatile applications.
Fine-pitched magnetic poles on this micropitch model. Make it ideally suitable for small and thin works.
Hexagonal wrench key is used for the magnetic ON/OFF change over handle.It is inserted through the side, easily removed and operates lightly.
The chuck surface has a wider effective magnetic area than other chuck of similar type.

Unit:mm

ORDER NO.	SIZE	CHUCKING SIZE				POLE PITCH	CHUCK MOUNTING FACE			HEIGHT	WEIGHT KGS	CODE NO.
		A	B	C	D	P	A	E	F	H		
VRTW-1018A	100X175	100	175	146	18	2.5 (1+1.5)	100	195	15	50	7.7	2015-130
VRTW-1515A	150X150	150	150	116			150	170	15		9.8	2015-131
VRTW-1530A	150X300	150	300	256			150	320	15		18.7	2015-132
VRTW-1535A	150X350	150	350	306			150	370	15		21.4	2015-133
VRTW-1540A	150x400	150	400	356			150	420	15		23.7	2015-134
VRTW-1545A	150X450	150	450	406			150	470	15		27.4	2015-135
VRTW-2040A	200X400	200	400	356			200	420	15		32.5	2015-137
VRTW-2045A	200X450	200	450	406			200	470	15		36.4	2015-138
VRTW-1224A	300X600	306	600	556			300	620	15		73	2015-138A
VRTW-1018S	100X175	100	175	146			100	175	-		8	2015-139
VRTW-1515S	150X150	150	150	121			150	150	-		9	2015-140
VRTW-1530S	150X300	150	300	256			150	300	-		20	2015-141
VRTW-1325S	125X250	125	250	206	20		125	250	15		13.1	2015-142

Round Type Magnetic Plate

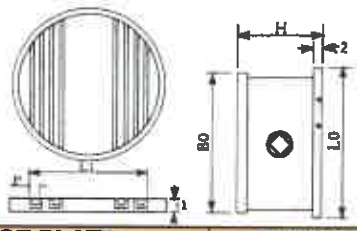

ORDER NO.VGD TYPE
Magnetic field intensity:
Higher than 450 gauss

APPLICATION

Suitable for light cutting and grinding on lathe, grinder, EDM and the Rotary Table.

Unit:mm

ORDER NO.	FACE PLATE			BOTTOM PLATE		POLE PITCH	HEIGHT	WEIGHT	CODE NO.
	B0	t1	L1	t2	L0	P	H	KGS	
VGD-06	150	21	101	18	200	9 (2+7)	78	9.8	2015-150
VGD-08	200		137		200			12.8	2015-151
VGD-10	250		191		250			20.2	2015-152
VGD-12	300		227		305			30.4	2015-153

Fine Pole Round Type Magnetic Plate

PLATE SIDE 21KGF
PLATE CENTER 30 KGF

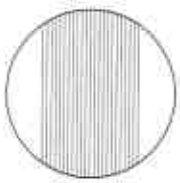

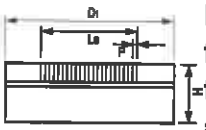

550 GAUSS

APPLICATION

New type of thin chuck, in 50mm thickness, for grinding and electrod-discharging works, for thin plate or small works, in wide range of applications, it features a wide effective magnetic area on the face plate (chucking face).

Unit:mm

ORDER NO.	DIAMETER	TOP PLATE		POLE PITCH	HEIGHT	WEIGHT	CODE NO.
		D1	Le	P	H	KGS	
VGDW-6	160mm	160	115	2.5 (1+1.5)	50	8	2015-154
VDGW-8	200mm	200	155	2.5 (1+1.5)	50	13	2015-155
VGDW-10	250mm	250	205	2.5 (1+1.5)	50	21	2015-156
VGDW-12	300mm	300	255	2.5 (1+1.5)	50	33.5	2015-157

Standard Pole Electro Magnetic Chuck

VERTEX®

450 GAUSS

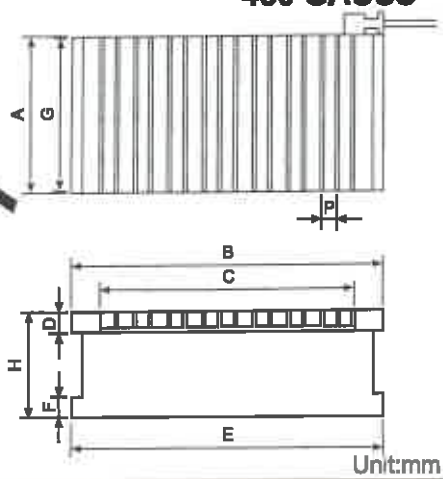

Unit:mm

APPLICATION

Most suitable for grinding operation, of standard electromagnetic chuck.

ORDER NO.	DIMENSION	CHUCKING SIZE				POLE PITCH	CHUCK MOUNTING FACE				VOLTAGE	CURRENT	WEIGHT (kg)	CODE NO.
		A	B	C	D	P	G	E	F	H				
VEM-1530A	150x300	150	300	228	20	15(3+12)	144	316	20	70	DC-90V	0.15A	21	2015-221
VEM-1535A	150x350	150	350	288	20	15(3+12)	144	366	20	70	DC-90V	0.18A	25	2015-222
VEM-1545A	150x450	150	450	378	20	15(3+12)	144	466	20	70	DC-90V	0.24A	32	2015-223
VEM-2040A	200x400	200	400	348	20	15(3+12)	194	416	20	70	DC-90V	0.47A	38	2015-224
VEM-2045A	200x450	200	450	378	20	15(3+12)	194	466	20	70	DC-90V	0.35A	43	2015-225
VEM-2550A	250x500	250	500	438	20	15(3+12)	240	500	20	70	DC-90V	0.73A	67	2015-226
VEM-3060A	300x600	300	600	529	20	15(3+12)	290	600	20	70	DC-90V	0.97A	97	2015-227
VEM-4080A	400x800	400	800	725	25	19(3+16)	390	800	20	80	DC-90V	1.56A	182	2015-228
VEM-40100A	400x1000	400	1000	936	25	19(3+16)	390	1000	20	80	DC-90V	1.60A	228	2015-229
VEM-50100A	500x1000	500	1000	936	25	19(3+16)	490	1000	20	80	DC-90V	1.72A	285	2015-230

Super-Powerful Electric Magnetic Chuck

MILLING M / C TYPE
1200 GAUSS

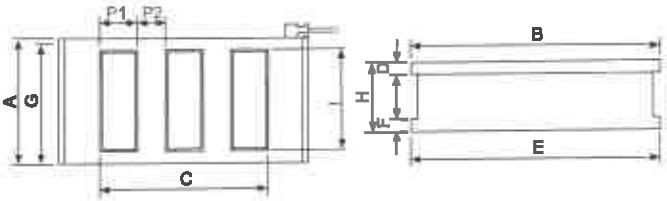

APPLICATION

Most efficient for heavy cutting with milling machine, shaper, planer and planomiller. It displays the power for the thick work and the high speed cutting operation.

Unit:mm

ORDER NO.	DIMENSION	CHUCKING SIZE					POLE PITCH		CHUCK MOUNTING FACE				VOLTAGE	CURRENT	WEIGHT N.W. (kg)	CODE NO.
		A	B	C	D	I	P1	P2	G	E	F	H				
VEM-2040Z	200x400	200	400	332	20	160	40	35	194	400	20	110	DC-90V	0.71	54	2015-251
VEM-2050Z	200x500	200	500	422	20	160	48	34	194	500	20	110	DC-90V	0.91	75	2015-252
VEM-2060Z	200x600	200	600	520	20	160	48	30	194	600	20	110	DC-90V	1.00	80	2015-253
VEM-2550Z	250x500	250	500	422	20	200	42	34	240	500	20	120	DC-90V	1.16	90	2015-254
VEM-3060Z	300x600	300	600	520	20	240	48	30	290	600	20	120	DC-90V	1.63	130	2015-255
VEM-4080Z	400x800	400	800	718	25	340	48	30	390	800	20	120	DC-90V	2.53	230	2015-256
VEM-40100Z	400x1000	400	1000	917	25	340	45	35	390	1000	20	120	DC-90V	2.96	288	2015-257
VEM-50100Z	500x1000	500	1000	917	25	430	45	35	490	1000	20	120	DC-90V	3.96	360	2015-258
VEM-60100Z	600x1000	600	1000	917	25	530	45	35	590	1000	20	120	DC-90V	5.30	432	2015-259

MAGNETIC CHUCK CURRENT ADJUSTER VERTEX®
(For Rectify & Demagnetize)

ORDER NO.VCC-705(5A)
For VGI-618~2048 / VLZ-510~612 / VIW-612~1224 / VEM-1530A~50100A

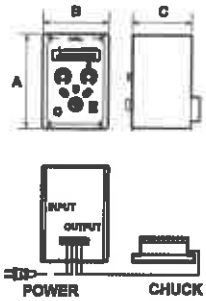

FEATURES
- Suitable for standard type of electric magnetic chucks.
- With current capacity of 5A; demagnetizing time is 6-15 seconds.
- Precisely adjust the magnetic force of electric magnetic chucks and indicate LED voltage.
- Suitable for any kind of electric magnetic chucks.

ORDER NO. VCC-805A (10A) FOR VGI-2060 / VEA-816~1640 / VEM-2040Z~40100Z
VCC-815 (15A) FOR VEA-2040~VEA2460 / VLZ-2060 / VEM-50100A / VEM-50100Z

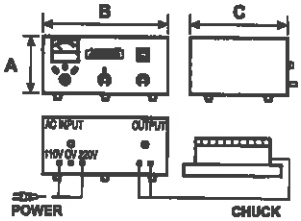

FEATURES
- Suitable for standard type of electric magnetic chucks.
- With current capacity of 10A and 15A; demagnetizing time is 6-15 seconds.
- Precisely adjust the magnetic force of electric magnetic chucks and indicate LED voltage and current.
- Suitable for any kind of electric magnetic chucks.

ORDER NO. VCC-820 (20A) FOR VEA-2460~ / VEM-60100Z

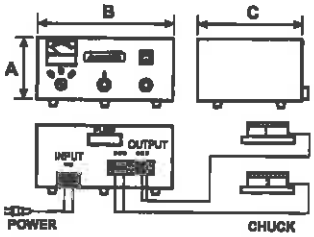

FEATURES
- Suitable for super powerful type of big electric magnetic chucks and could control 2 chucks at the same time.
- With current capacity of 20A; demagetizing time is 8-15 seconds.
- Precisely adjust the magnetic force of electric magnetic chucks and indicate LED voltage and current.
- Built-in fan for radiating heat.
- Suitable for any kind of electric magnetic chucks.

Unit:mm

ORDER NO.	INPUT VOLTAGE (SINGLE PHASE)	OUTPUT		DIMENSION			NET WEIGHT (KGS)	CODE NO.
		VOLTAGE	CURRENT	A	B	C		
VCC-705	AC 110V/220V	DC 0-100V	5A	200	137	122	3.5	2015-380
VCC-805A	AC 110/220/380/415/440V	DC 0-100V	10A	150	330	260	18	2015-381
VCC-815	AC 220/380/415/440V	DC 0-120V	15A	150	330	260	20	2015-382
VCC-820	AC 220/380/415/440V	DC 0-120V	20A	180	385	295	32	2015-383

Variable Speed Rotary Magnetic Chuck

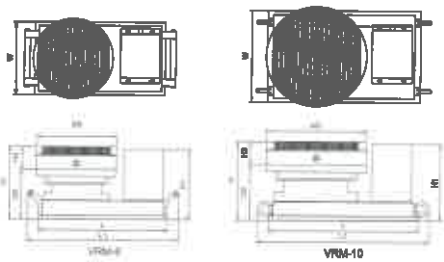

FEATURES
- This rotary magnetic chuck with the motor. The rotary speed can adjustable.
- It's easy and simple for set up on the surface grinding machine. It's for rotary grinding.
- The precision is within 0.002 mm. High precision, High efficent.
- It provides well prevention for dust, coolant, and lubricants. Spindle end be applied accuracy bearing, can be assured to keep very steady under load grinding.

ORDER NO.	L	L1	W	H	H1	H2	H3	ØD	VOLT	G.W.	CODE NO.
VRM-8	325	370	176	180	177	122	58	200	220V	60kg	8001-047
VRM-10	376	422	218	190	183	132	58	250	220V	80kg	8001-048

Magnetic Transisting Block

VERTEX®

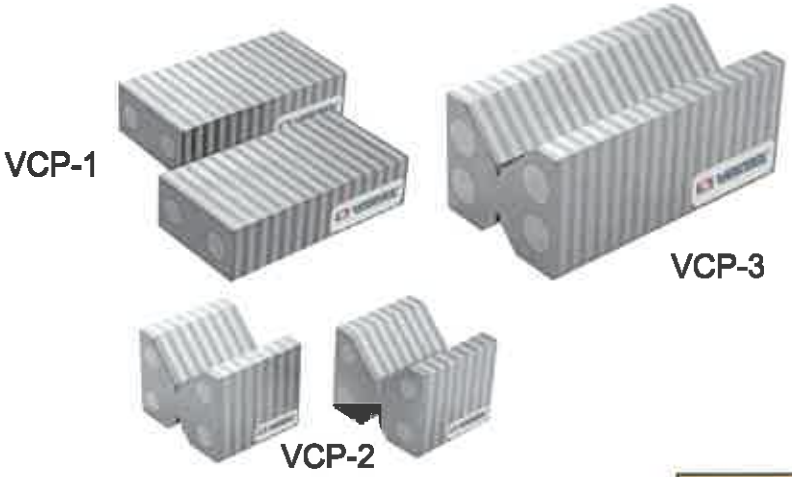

VCP-1 Chuck Parallels
100x50x25 mm
$3^{15}/_{16}$"x2"x1" Matched pair.
VCP-2 Chuck Blocks
49.5x58x45.5 mm
$1^{31}/_{32}$"x$2^{5}/_{16}$"x$1^{13}/_{16}$" Matched pair.
VCP-3 Chuck Block
109x58x46 mm
$4^{3}/_{8}$"x$2^{3}/_{8}$"x$1^{7}/_{8}$"single
VCP-4 Chuck Block
Each one of VCP-1 & VCP-2

- The V-Blocks and Parallels transfer the magnetism from permanent magnetic chucks.
  The steel used in all V-Blocks and Parallels is selected for the hightest magnetic transfer and is cast integrally with aluminum.

ORDER NO.	WEIGHT KGS	CODE NO.
VCP-1	1.3	2015-401
VCP-2	1.2	2015-402
VCP-3	1.4	2015-403
VCP-4	2.5	2015-404

Magnetic Transisting Block Set

ORDER NO.VCP-6 CODE NO.2015-410

WEIGHT:4.2 kgs

Non-magnetic laminated plates and blocks are extras to increase the versatility of chucks. These plates and blocks offer excellent guidance of the magnetic force, and can be used in combination with chucks as 'extensions' for the clamping of workpieces of complex shapes.

BOXED SET

Comprises a selected set of 4 pairs of blocks

NO. of Blocks	STYLE	LxHxWxPCS	USED MODEL
1Pair		60x35x15x2	VCP-0
2Pair		100x50x25x2	VCP-1
1Pair		49.5x58x45.5	VCP-2

Magnetic Adjustable Link

ORDER NO.VCP-5 CODE NO.2015-420

WEIGHT:0.8 kg

- Each block 2"x1"x1".Length overall: $4^{1}/_{8}$". width over all $2^{1}/_{8}$".
- For Holding and welding.
- Magnetic blocks can be set at any angle by adjustment and locking of the wing nut. When used in multiples, a number of sheets can be held in complicated arrangement.
- Compact in size for holding work in confined spaces.

Magnetic Steel Sheet Separator

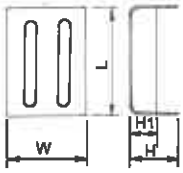

APPLICATION

- Suitable for separating a pile of thin iron plates or for chips separation.

FEATURES

- By the principle of mutual repulsion between same magnetic poles, this item enable easy separation of thin iron plates.
- Also useful for chips separation on the small conveyer bilt.

Unit:mm

ORDER NO.	DIMENSION				NET WEIGHT KGS	CODE NO.
	L	W	H	H1		
VCP-10	130	130	65	35	2.6	2015-430
VCP-11	210	155	65	35	4.2	2015-431

MAGNETIC TOOLS

Magnetic Chip Collecter

Magnet turned ON attracts Powerfully.

Magnet turned OFF Releases by Piling Up Lever.

APPLICATION

- You can use it in a wide range of fields for machining, casting food chemical processing, etc.
- Most suitable for collecting iron pieces scattered on the floor or mixed in the medium, for putting in order, and holding the work at the buffing and other types of operations. This is conveniently applied to uses in selecting and collecting iron powder and granule materials; even for house-hold and educational uses.

FEATURES

- Magnetic force is turned ON/OFF just by operating the level lightly with a hand.
- Powerful magnet ensure very strong adsorptive force with wide attractive face.

ORDER NO.	Dimension	Holding Mass	Weight kgs	CODE NO.
VCP-15	ø112x178H	0.9	1.9	2015-440

Magnetic Separating Bar Unit

VMS-9B

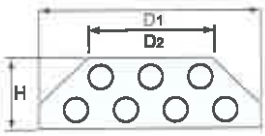

VMS-7B

BAR TUBE

Magnetic Separating Bar Unit made with Powerful magnet. it is essential to increase operation efficiency in removing on substances from powder and grain Materials, as in the industries of chemical, various and plastic...etc.
A wide range of applications and easy to mount.

TEMPERATURE LIMIT 60°C

Unit:mm

ORDER NO.	D_1	D_2	H	BAR TUBE	WEIGHT KGS	CODE NO.
VMS-7B	175	112	75	ø22.2x180	2.4	2015-450
VMS-9B	218	156	75	ø22.2x230	3.8	2015-451

Permanent-Electro Magnetic Chuck

VERTEX®

Suitable for Milling **Mag. Power 1000 kgs / 100 cm²**

NEW

5 SIDES MACHINING

CONTROLLER TYPE:

※C1 for VPE-2540, 2560, 2580, 3030, 3040, 3060, 4040
44x40x33cm WEIGHT Kgs: 11Kgs

※C2 for VPE-25100, 3080, 3090, 4060, 4080, 5060
44x40x33cm WEIGHT Kgs: 11Kgs

※C4 for VPE-40100, 5080, 50100, 60100
52x40x40cm WEIGHT Kgs: 12Kgs

SETS CONTROLLER INCLUDED

optional:

VSB- 49X48X30 mm
SPRING BLOCK

50X50X32.5 mm
VTJ-
MAGNETIC TRANSISTING SOFT JAW

ORDER NO.	ACCESSORIES	SIZE	WEIGHT KGS	CODE NO.
VSB-	SPRING BLOCK	49x48x30 mm	0.5	2033-450
VTJ-	MAGNETIC TRANSISTING SOFT JAW	50x50x32.5 mm	0.59	2033-451

FEATURES

- Ensure higher magnetic and mechanical performances, as well as absolute reliablity.
- Owing to no power supply to keep the magnetic chuck ON, it could be used for long time and never get temperature to affect the accuracy of workpiece. "COLD" device, not subject to inetrnal wear or deformation resulting from moving internal parts.
- Easy and convenient to clamp a workpiece, shortens clamping time.
- Most suitable for heavy duty machining on medium, large or even rough components.
- Easily integrated with Pallet Change of Horizontal Machining Center and FMS System the Magnetic Chucks will be as geomertrically stable as the table itself.
- For the most powerful machine tools available. Systems are switched ON or OFF with simple electrical pulse. A variable output from 20%-100% is controlled from the operator push button unit.
- Entirely independent of external power supply when holding work pieces. There is no risk, when power fails.
- 2 seconds control for power ON & OFF. No electric Power Supply required to keep the magnetic chuck ON. Safety in case of power failure.
- 10mm MIN. Thin workpiece & MIN. 4 block magnetic pole for workpiece.
- Every work piece need 3 transisting soft jaw to stabilize holding power.
- Spring block has 2.5mm displacement up & down.

Permanent-Electro Magnetic Chuck

VERTEX®

Suitable for Milling

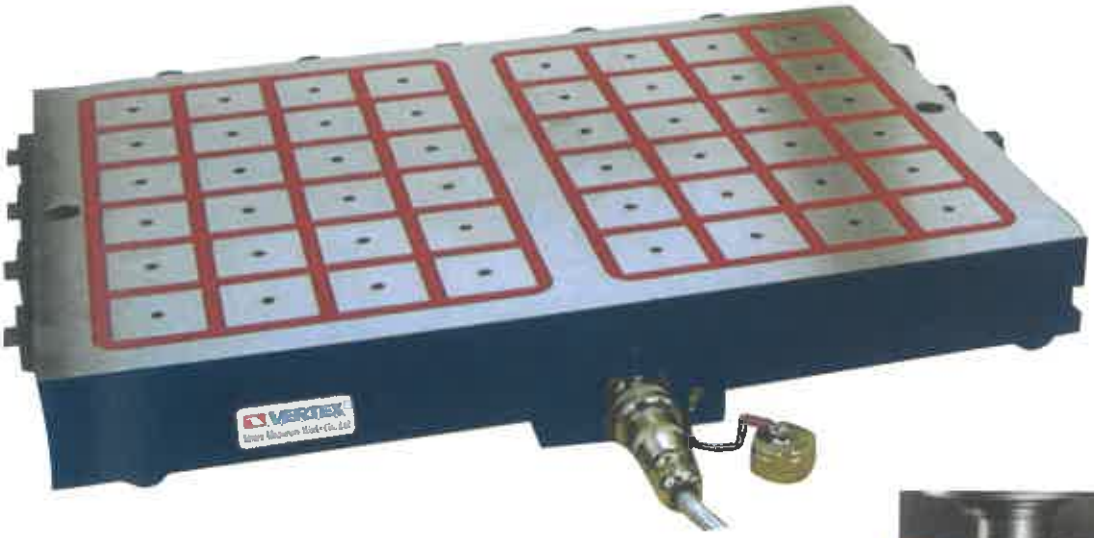

STRONG CLAMPING FORCE, FAST SETTING, HIGH SAFETY

※Recommend voltage : 380V 3PH

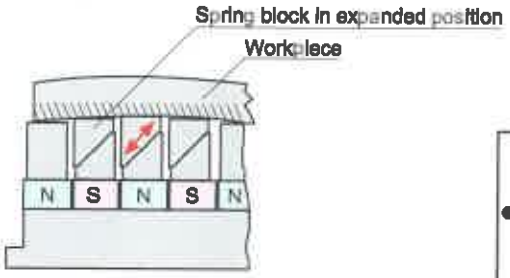

MAGNETIC FORCE 1000 KGS / 100 cm²

MAGNETIC FORCE 1000 KGS / 100 CM² / 4 SQUARE BLOCKS

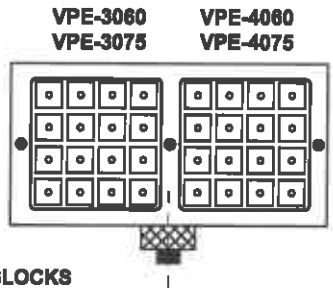

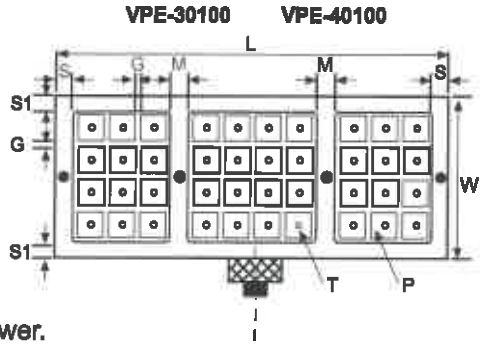

※ Item / workpiece must cover at least 3 - 4 blocks to have enough holding power.

ORDER NO.	DIMENSION							PITCH G	POLE P	No. of POLE	VOLTAGE	AMP	CHUCK N.W	CONTROLLER		CODE NO.
	W	L	S	S1	M	T	HIGHT							TYPE	N.W.	
VPE-2540	240	430	30	25	--	M8	60	10	50X50	18	AC-380V 3PH	18	50	C1	10	2033-030
VPE-2560	240	590			30					24		24	69			2033-031
VPE-2580	240	800			30					30		30	92			2033-032
VPE-25100	240	990			30					42		40	111	C2		2033-033
VPE-3030	300	310			--					16		16	44	C1		2033-048
VPE-3040	300	430			--					24		24	61			2033-049
VPE-3060	300	590			30					32		35	82			2033-050
VPE-3080	300	810			30					44		32	116	C2		2033-051
VPE-3090	300	870			30					48		40	123			2033-051A
VPE-30100	300	990			30					56		35	138			2033-052
VPE-4040	420	430			--					36		18	84	C1		2033-052A
VPE-4060	420	590			30					48		25	116	C2		2033-053
VPE-4080	420	810			30					66		30	159	C2	15	2033-054
VPE-40100	420	990			30					84		45	193	C4		2033-055
VPE-5060	480	590			30					56		28	129	C2		2033-060
VPE-5080	480	800			30					70		35	185	C4		2033-061
VPE-50100	480	990			30					98		50	219			2033-062
VPE-60100	600	990			30					126		28	274			2033-063A

Permanent Magnetic Lifter (ON/OFF Type)

VERTEX

Convenient and
efficiency for makes
more profit
Light weight
Less dimension
Lower price

Safety coefficient
3.5 times!

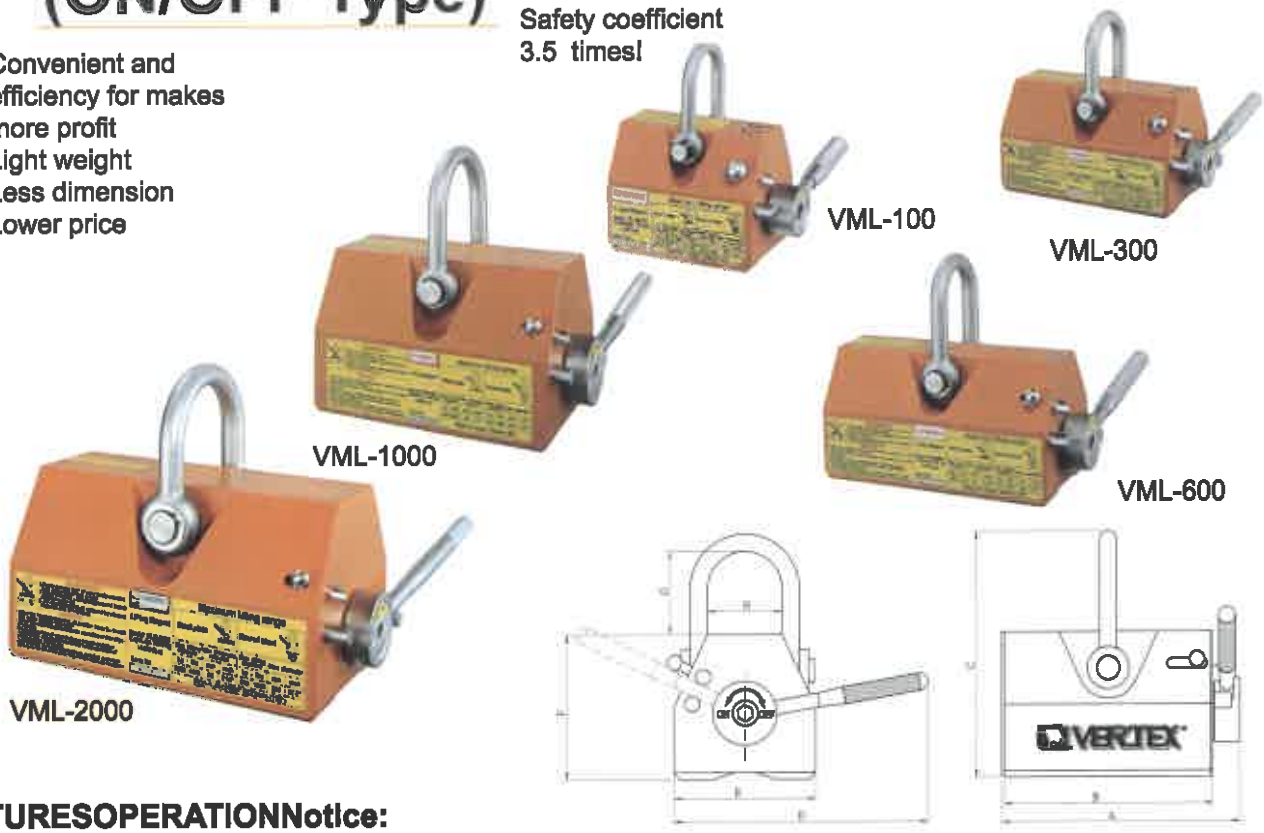

FEATURESOPERATIONNotice:

- Each size suit for plate type & round type steel using.
- All new models with " light weight" less dimension" and " lower price".
- Made by permanent magnet, require no power supply, thus eliminating hazards due to failure wiring system as electric type.
- It features powerful magnetic force, with 3.5 times safety coefficient makes more safety in use.

OPERATION

With ON/OFF switch, it is very easy and convenient to operate.
See as the example pictures as below

ON

OFF

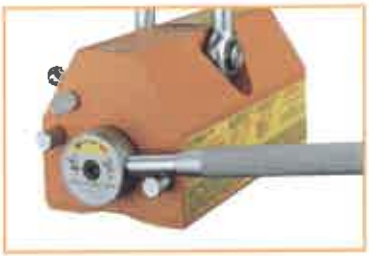

Notice:

Never moves the handle to "ON" side, except on an iron object of holding.

- Never operate over human's head.

DIMENSIONS

ORDER NO.	Capacity	A	B	C	D	E	F	G	H	Weight	SAFETY COEFFICIENT	CODE NO.
	kg lbs	mm inch	mm inch	mm inch	mm inch	mm inch	mm inch	mm inch	mm inch	kg lbs		
VML-100	100 220	107 4.2	84 3.3	120 4.7	125 4.9	60 2.4	71 2.8	41 1.6	30 1.2	2.7 5.5	x3.5 times	2018-060
VML-300	300 660	180 7.1	155 6.1	156 6.1	185 7.3	90 3.6	93 3.7	51 2.0	41 1.6	9.1 18.9		2018-061
VML-600	600 1320	255 10	224 8.8	212 8.3	260 10.2	115 4.5	120 4.7	77 3.0	52 2.0	21.5 46		2018-062
VML-1000	1000 2200	280 11	245 9.6	286 11.3	371 14.6	165 6.5	169 6.7	97 3.8	87 3.4	53.4 101		2018-063
VML-2000	2000 4400	422 16.6	380 15	348 13.7	512 20.2	216 8.5	215 8.5	105 4.1	121 4.8	127.8 259		2018-064

Permanent Magnetic Lifter (ON/OFF Type)

VERTEX®

APPLICATIONS

- Suitable for move plate steel, block steel and round steel, such as machine parts,press molds, plastic molds and iron material .....etc.

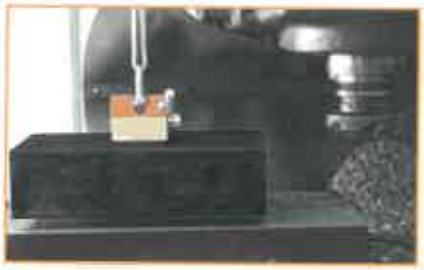

LOAD OF HOLDING POWER

- The load of holding power will changes depending on the thickness, attractive face roughness and quality of material and clearance between the workpiece with magnet.

	Thickness		Percentage of lifting capacity					
	mm	inch	VML-3000	VML-2000	VML-1000	VML-600	VML-300	VML-100
T1	up 60	up 2.36"	100%	100%	100%	100%	100%	100%
T2	55	2.16"	95%					
T3	50	1.97"	90%	95%				
T4	45	1.77"	85%	90%				
T5	40	1.57"	80%	85%				
T6	35	1.38"	70%	75%	90%			
T7	30	1.18"	60%	65%	80%			
T8	25	0.98"	50%	55%	70%	90%		
T9	20	0.79"	40%	45%	60%	75%	90%	
T10	15	0.59"	30%	35%	50%	60%	70%	
T11	10	0.39"	20%	25%	35%	45%	50%	70%
T12	5	0.20"	10%	15%	20%	25%	30%	40%

Table of difference in holding power by attractive face roughness For all models

	0 50% 100% 125%
F1	▽▽▽ 125%
F2	▽▽ 100%
F3	▽ 90%
F4	~ 65%

Table of difference in holding power by material quality For all models

	0 50% 100%
M1	Low carbon 100%
M2	Moderate carbon 85%
M3	High carbon 75%
M4	Cast iron 70%

Calculating Formula for "Range of Lifting Capacity" → (TxFxMxCapacity of Lifter)

Example:
Terms of workpiece: T8, F1 and M2
90% x 125% x 85% x 600kgs (VML-600)=573kgs

SAFETY COEFFICIENT x 3.5 times

The capacity of magnet indicated as 1/3.5 of holding power, it means the real holding power is 3.3 times of capacity. For example the capacity of VML-600 is 600kgs (1320lbs) but the real holding power is 1980kgs (4350lbs).
The large safety coefficient is consideration for ensuring the use in safety.

MAXIMUM LIFTING RANGE

FORM OF MATERIAL	STEEL PLATE		ROUND STEEL			
ORDER NO.	Max.lifting capacity	Min.thickness required	Max.lifting capacity	Min Dia	Max.diameter	Maximum length
	kg lbs	mm inch	kg lbs	mm inch	mm inch	mm inch
VML-100	100 220	15 0.59"	45 99	80	150 5.9"	1000 40"
VML-300	300 660	25 0.98"	135 300	100	250 9.8"	1500 60"
VML-600	600 1320	30 1.18"	270 600	180	350 13.8"	2000 80"
VML-1000	1000 2200	40 1.57"	450 990	230	450 17.8"	2500 98"
VML-2000	2000 4400	55 2.16"	900 1980	260	550 21.6"	3000 118"
VML-3000	3000 6600	60 2.36"	1350 2970	300	650 25.6"	3500 138"

Magnetic Lifter

VERTEX

CAM TYPE

FEATURES

- Normal operation is not influenced on power off or system breakdown, as there is permanent magnet.
- Cam mechanism, easy operation.
- Ground surface of workpiece may be attracted to be scrap occasionally, please be careful.

LOADING

- Take the magnetic table on the workpiece, and move it at the vertical position.

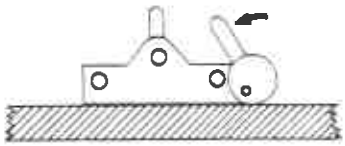

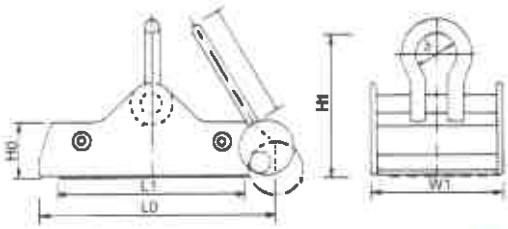

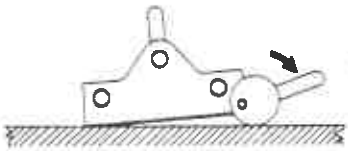

UNLOADING

- Move th level at the horizontal position, the workpiece will be separated.

- Never operate over human's head.

ORDER NO.	CAPACITY	W1	L1	L0	H0	H1	d	l	NET WEIGHT (KGS)	CODE NO.
VGP-100	1000kg	204	298	366	65	125	50	135	25.8	2018-040
VGP-200	2000kg	330	380	445		130			46.8	2018-041

Magnetic Lifter

HANDLE TYPE

VML-80

VML-140

FEATURES

Work is held and released very smoothly.

- Most suitable to move materails or semi-finished products such
- as black steel plate, flat iron and other materials etc.

HOLDING POWER

It depends on the attractive face, quality and thickness of material and clearance between the material and magnet.

MAXIMUM HOLDING POWER

Workpiece must be thick enough and the surface must be free of dust. magnetic attraction is best and with low carbon-soft steels.

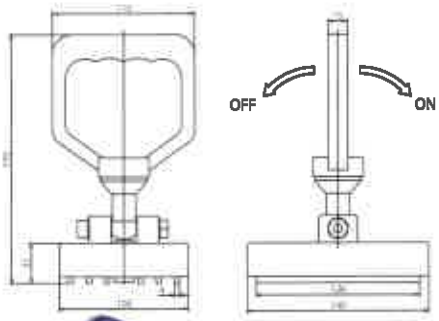

VML-150

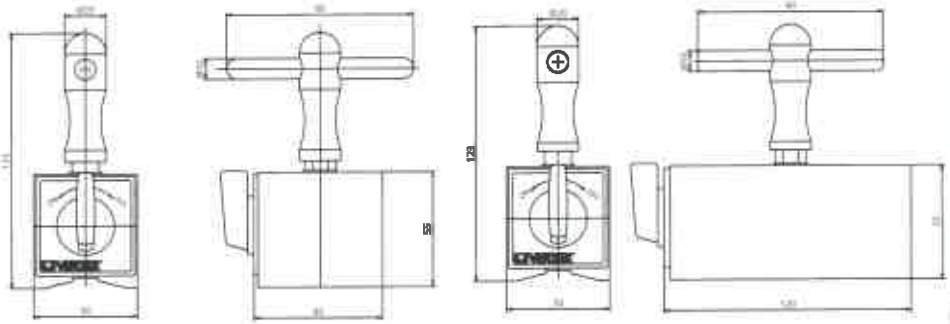

VML-80 VML-140

Unit:mm

ORDER NO.	CAPACITY	L	W	H	N.W (KGS)	CODE NO.
VML-80	80kgf	60	50	55	1.23	2018-054
VML-140	140kgf	120	50	55	2.2	2018-055
VML-130	130kgf	120	50	55	1.9	2018-053
VML-150	150kgf	140	100	192	2.5	2018-056

VML-150

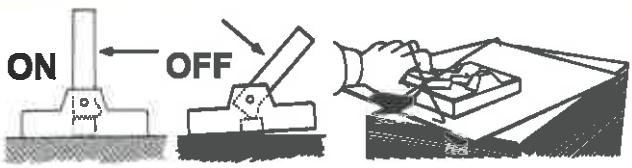

Demagnetizer

VERTEX®

- Suit for drill, end mill, hard ware, cutting tool...etc.
- Handy type, It can also use the cutting tool.

※Guaranteed for 3 months.

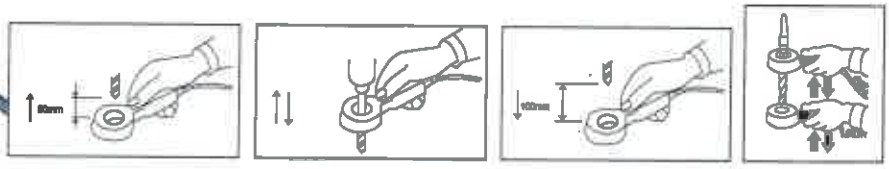

ORDER NO.	INPUT VOLTAG	CURRENT	POWER	DUTY CYCLE	HOLE CAPACITY	WEIGHT KGS	CODE NO.
VDM-40	AC110V/220V	0.5A	80W	20%	Ø40MM	1.3	2019-030

NEW

- Suit for molding.
- Work perfectly in the narrow place.
- No need to remove the workpiece.

Handy Type
For Bigger Or Heavy Workpiece
※ Light Duty Only
※ Guaranteed for 3 months.
※ Bullt-in over-heat safety Stop

ORDER NO.	INPUT VOLTAGE (SINGLE PHASE)	CURRENT	※ USING TIME	DIMENSION			WEIGHT KGS	CODE NO.
				L	M	H		
VDM-50	110V/220V/1PH	1.2A	Demagnetize 1 minute waiting 4 minutes	345	35	25	1.2	2019-031

Demagnetizer

Demagnetizer one way only

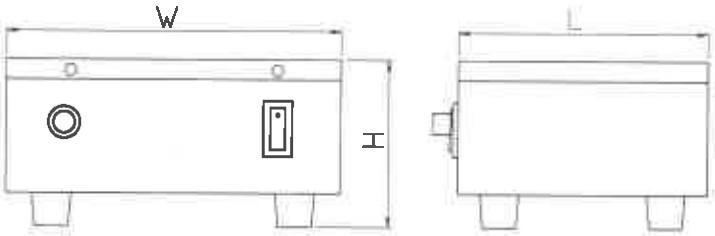

FEATURES

- Suitable for general component spare parts, attachments, tools, etc, forfixed way demagnetization.
- Suitable for longtime use; be able to use continuously for 24 hours. Rest 10 Min Per 3 hrs.
- With the design of double coils inside to avoid heat release.

※ Guaranteed for 3 months.
※ If operate ←→ will cause item magnetized

DELUXE TYPE

Unit:mm

ORDER NO.	INPUT VOLTAGE	CAPACITY	DUTY CYCLE	DIMENSION			NW KGS	CODE NO.
				L	W	H		
VDM-68	110V/220V	AC-330VA	100%	140	195	110	7.4	2019-001

Demagnetizer

VERTEX

VDM-8, 11

FEATURES

- Input voltage 110-220 Volts AC.
- With On-Off switch.
- Quickly Demagnetizes tools, drills punches, dies,etc. Held by magnetic chucks. Parts are demagnetized by drawing across surface.
- Voltage 200-240 should be ordered.

※Guaranteed for 3 months.

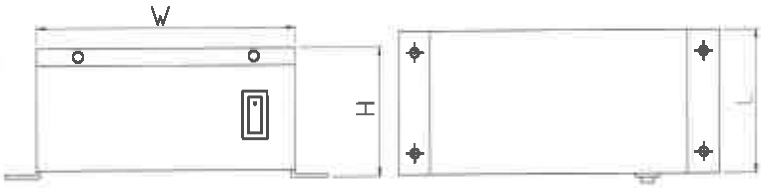

Unit:mm

ORDER NO.	INPUT VOLTAGE	CAPACITY	WORKING SURFACE	HEIGHT	WEIGHT (KGS)	DUTY CYCLE	CODE NO.
VDM-8	AC- 110V 220V	210VA	160X110	100	4.5	50%	2019-011
VDM-11	110V 220V	550VA	200X280	130	16	100%	2019-021

Mini Type Demagnetizer

FOR HANDY AND CAN NOT BE MOVED OBJECT

- Suitable for large type workpiece.

※Guaranteed for 3 months.

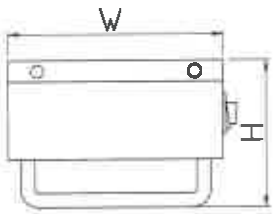

Unit:mm

ORDER NO.	INPUT VOLTAGE	CAPACITY	WORKING SURFACE	HEIGHT	WEIGHT (KGS)	DUTY CYCLE	CODE NO.
VDM-9	AC-110V 220V	110VA	123X83	83	1.8	90%	2019-020

Tunnel Type Demagnetizer And Magnetizer

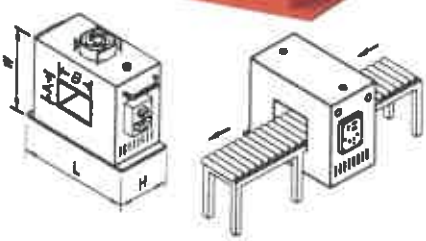

FEATURES

- Merely using tools to pass through or move into a tunnel will cause a good demagnetizing effect.
- Suitable for planned automatic process; be adapted for delivery belts to proceed in order to increase productivity.
- Suitable for hand manual tools, etc. for filling magnetism.
- Suitable for large production of component spare parts, attachments, tools...etc.
- Suitable for longtime use; be able to use continuously for 24 hours.
- Super efficacy in demagnetizing and magnetizing; suitable for many kinds of metals. Attached a fan inside for dissipating heat.

※Guaranteed for 3 months.

ORDER NO.	POWER SOURCE	CAPACITY	DIMENSION			THROUGH HOLE		NET WEIGHT KGS	DUTY CYCLE	CODE NO.
			L	W	H	A	B			
VDM-150	AC 220/380V (single phase)	3520AV	370	370	200	100	150	33	100%	2019-025
VDM-250		4840AV	470	370	200	150	250	52		2019-026
VDM-450	AC 220/380V (3 phase)	4400VA	700	500	200	250	450	80		2019-027

Chip Collector Mini Handy Type VERTEX®

NEW

- Pull the trigger to drop attracted items easily.
- Permanent magnet.
- Light and handy design fitting ergonomics.
- Easy to pick up various kinds of hand of hand tools and small iron or steel parts for office, house and factory.
- Impact-proof plastic materials.

※ Need normal work temp

Unit:mm

ORDER NO.	PACKING	HOLDING MASS	CUFT	DIMENSION			WEIGHT KGS	CODE NO.
				L	W	H		
VCC-16	Color BOX	0.65	0.09′	110	110	190	0.7	2019-040

Chip Collector With Adjustable Arm Type

NEW

- Work perfectly in the narrow space.
- Pick up ferrous metal items such as tools, bolt, paper clips, nails, etc.
- Deluxe handle for comfort.
- Easy to use, safe, practical and time saving.
- Permanent magnet.
- Weight : 2 kgs

ORDER NO.	MAGNETIC BASE	HOLDING MASS	CUFT	TOTAL LENGTH	CODE NO.
VCC-17A	120x70mm	0.7	0.4′	700 mm	2019-041A

Chip Collector With Wheels

NEW

- Easy to use, safe and practical time saving device.
- Release magnetic pick up tool has a magnetic device which enable to attract any metal items and spare parts laying on the floor without the trouble to pick them up one by one.
- Pull the trigger to release magnetic force.
- Permanent magnet.

ORDER NO.	PACKING	HOLDING MASS	kgf	CUFT	LENGTH	WEIGHT KGS	TOTAL WIDTH	CODE NO.
VCC-19	In Bulk	0.85	83	1.15′	720~1035mm	1.5	377 mm	2019-043

Chip Collector With Flexible Arm

Flexible Magnetic Pick-Up Tool

WEIGHT:0.4kg

NEW

ORDER NO.	VCC-20
PACKING	Tied On Card
HOLDING MASS	0.11
CUFT	0.04′
LENGTH	533 mm
CAPACITY	1.2 lbs / 0.54kgs / 50kgf
CODE NO.	2019-044

Chip Collector With LED

Lighted Flexible Magnetic Pick-Up Tool

WEIGHT:0.2kg

NEW

ORDER NO.	VCC-21
PACKING	Tied On Card
HOLDING MASS	0.08
CUFT	0.04′
LENGTH	533 mm
CAPACITY	0.7 lbs / 0.31kgs / 30kgf
CODE NO.	2019-045

With 2pc 1.5V batteries

Magnetic V Block

VERTEX®

1 PCS

- For round / square workpiece
- For checking on surface plate during the production.
- For measuring

※ Not for LAB.

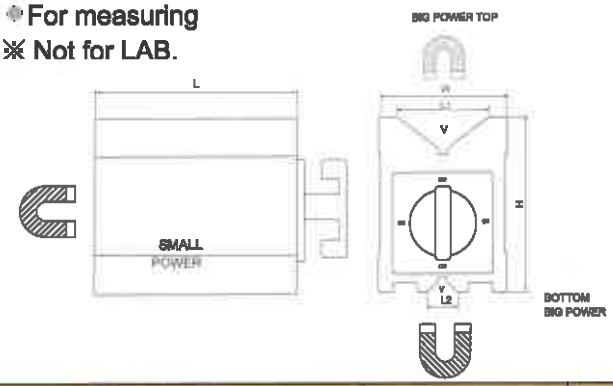

ORDER NO.	Magnetic Power(pull)	V	v	Dimension					Wt. kgs	CODE NO.
				H	W	L	L1	L2		
VCP-25	70kgf	ø7~ø60	ø7~ø25	95.3 3.75"	70 2.76"	101.6 4"	45 1.97"	18 0.75"	3.9	2015-501

Magnetic V Block

1 PCS

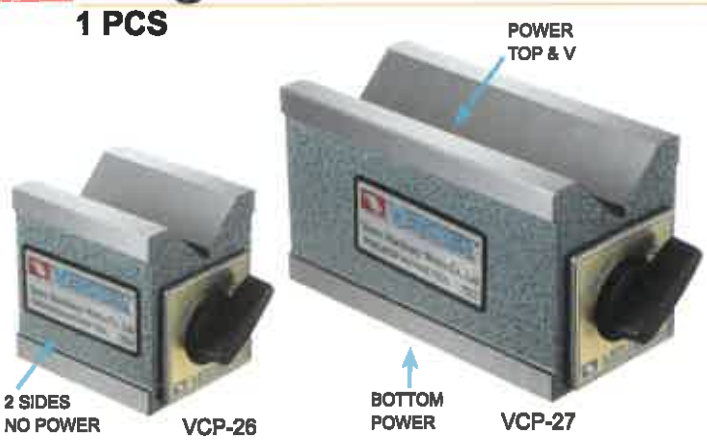

- For round / square workpiece
- For checking on surface plate during the production.
- For measuring

※ Not for LAB.

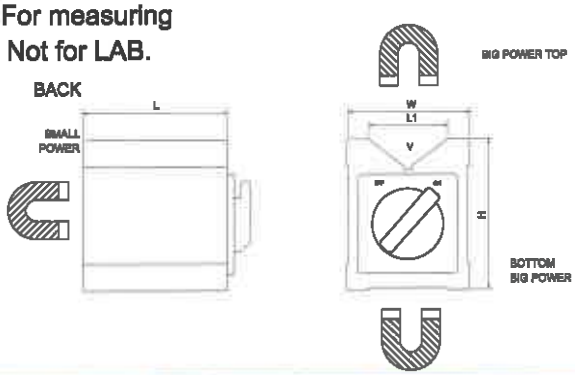

ORDER NO.	Magnetic Power(pull)	V	Dimension				Wt. kgs	CODE NO.
			H	W	L	L1		
VCP-26	50kgf	ø8~ø50	73 2.87"	60 2.13"	70 2.76"	37 1.5"	1.8	2015-510
VCP-27	70kgf	ø8~ø50	73 2.87"	60 2.36"	125 4.29"	38 1.5"	3.3	2015-511

Magnetic V Block

PAIR

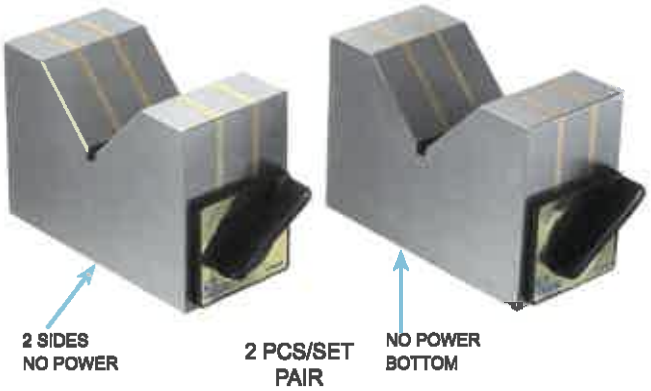

Magnetic V-Block

- Two pieces finished to the same dimension and accuracy are used together as a set.
- For round / square workpiece
- For checking on surface plate during the production.

※ Not for LAB.

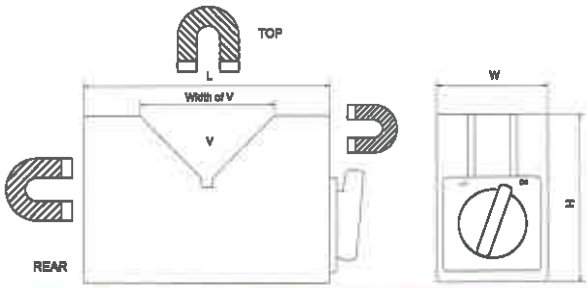

ORDER NO.	Magnetic Power(pull)	V	Dimension			Width of V	Wt. kgs	CODE NO.
			H	W	L			
VCP-29	17kgf	ø8~ø80	74 2.91"	48 1.77"	110 4.33"	60 2.36"	4.9	2015-521
VCP-30	23kgf	ø8~ø120	100 3.94"	50 1.97"	150 5.91"	90 3.54"	8.9	2015-522

Magnetic Square Block

VERTEX®

FOR MEASURING

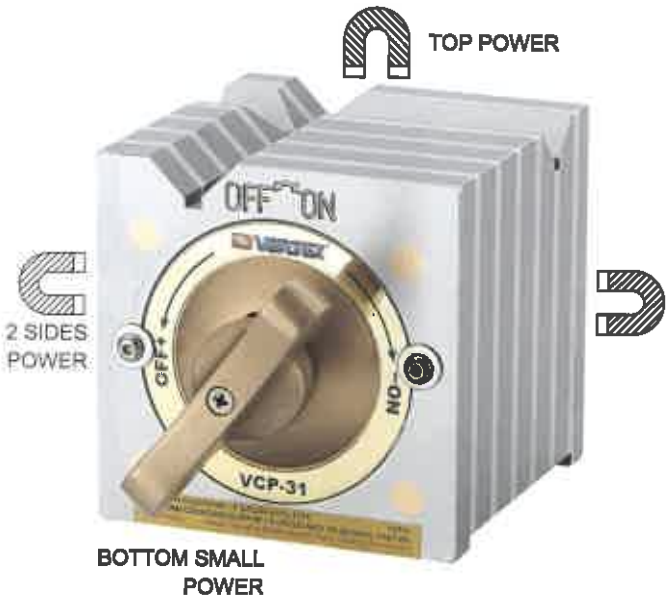

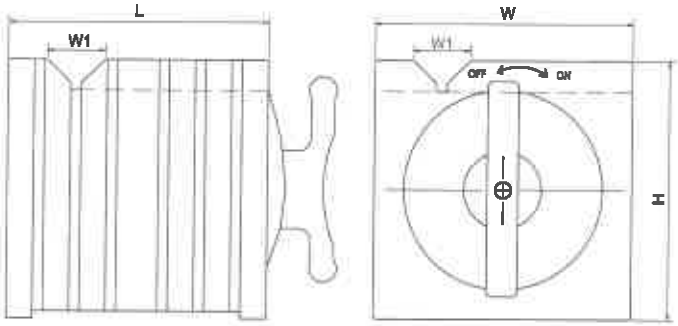

- The V-Blocks and Parallels transfer the magnetism from permanent magnetic chucks. The steel used in all V-Blocks and Parallels is selected for the hightest magnetic transfer and is cast integrally with aluminum.
- For measuring

※ Not for LAB.

ORDER NO.	Mag. Power of V groove	Mag. Power of base	V	H	W	L	W1	Wt. kgs	CODE NO.
VCP-31	25kgf	50kgf	ø7~ø32	100 3.94"	100 3.94"	100 3.94"	23 1.02"	6.5	2015-530
VCP-32	50kgf	140kgf	ø8~ø42	150 5.91"	150 5.91"	150 5.91"	29 1.26"	23	2015-531

Magnetic Square Holder

NEW

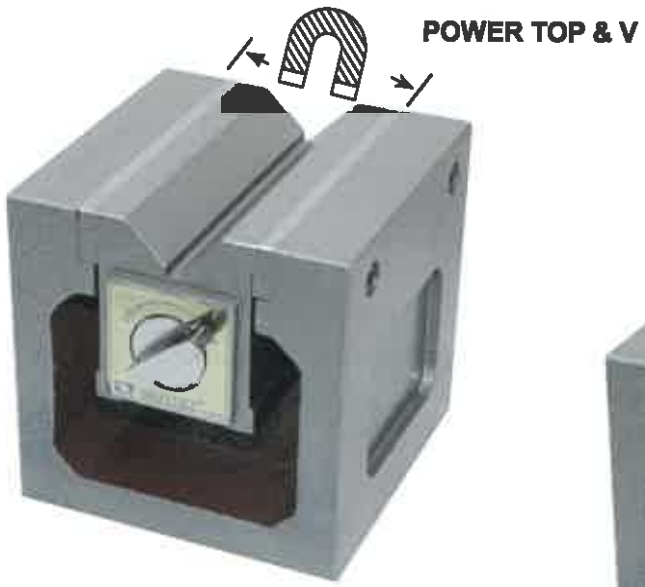

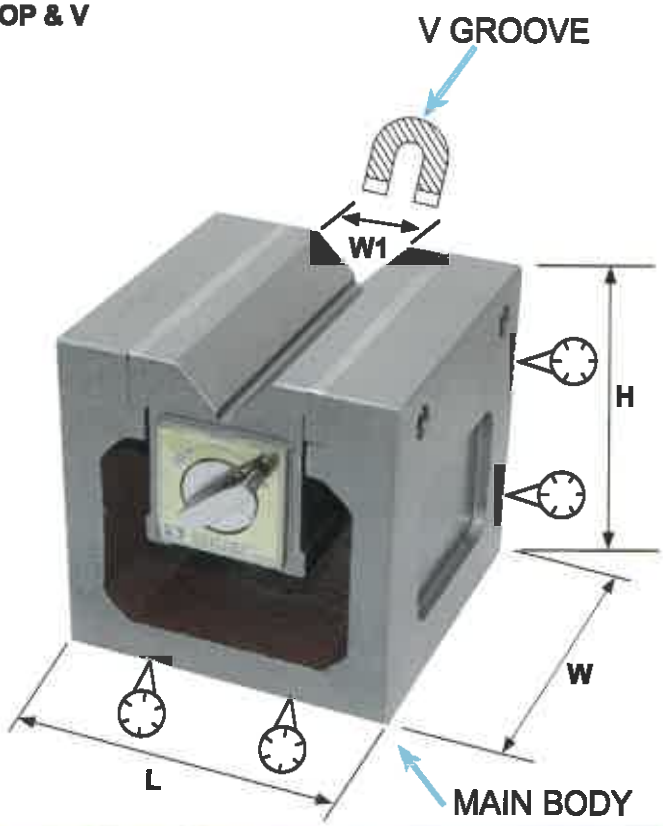

- Precision ground
- Base & V groove parallism : 0.02 / 100 mm
- Magnetic power : V groove only
- MAIN BODY : CAST IRON
- Light duty, for measuring
- Easy movement
- Multi - type

※ Not for LAB.

ORDER NO.	Mag. Power of V groove	V	H	W	L	W1	Wt. kgs	CODE NO.
VCP-40	70kgf	ø8~ø50	125	125	125	37	8.54	2015-540

FIXED ARM TYPE VMB-B,01,02 THE DIAL CLAMP HOLE Ø6.5 & Ø8

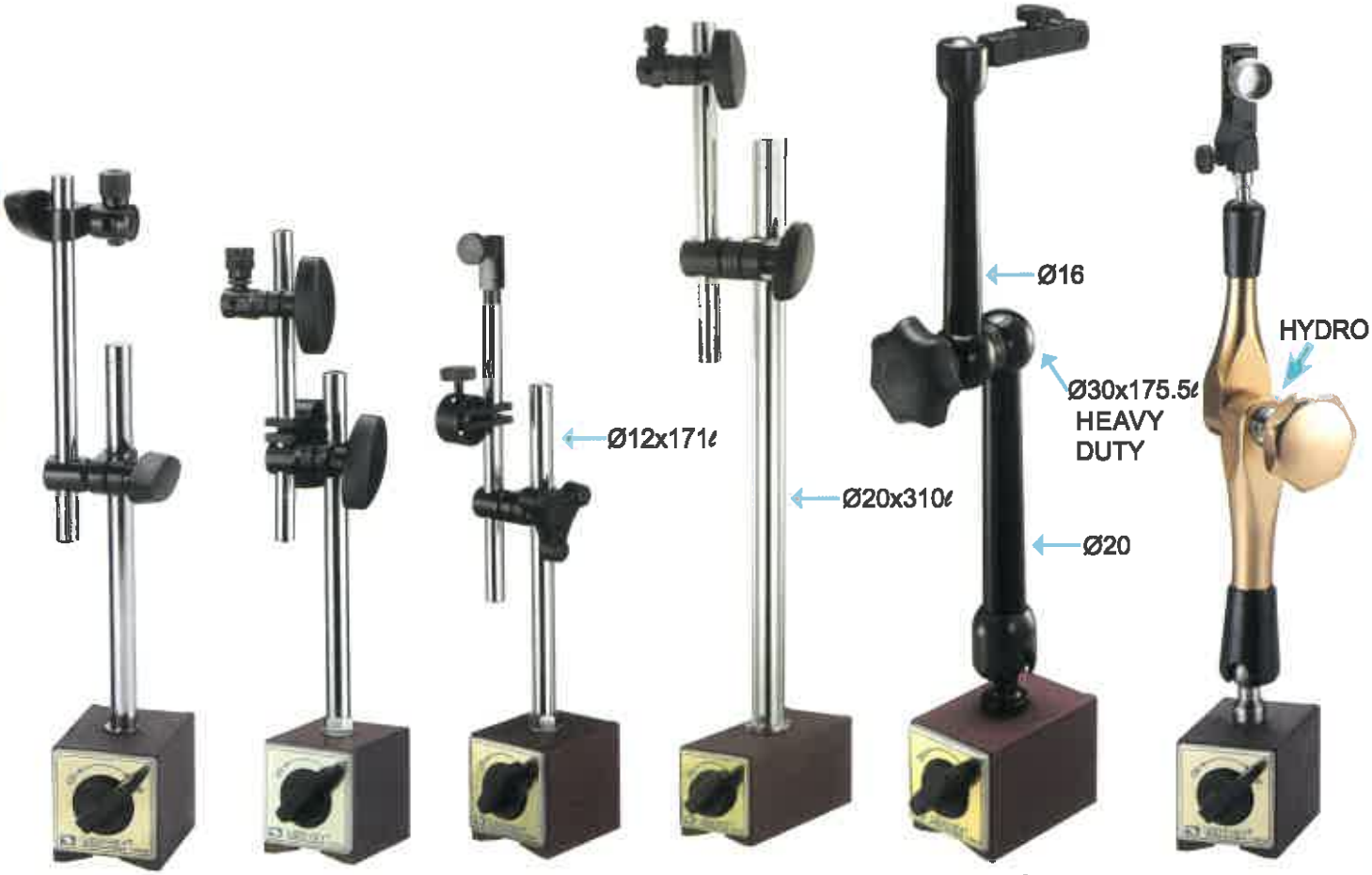

ORDER NO. VMB-B MAGNETIC BASE /80kgs

ORDER NO. VMB-01 MAGNETIC BASE (ADJUSTABLE TYPE) /80kgs

ORDER NO. VMB-02 MAGNETIC BASE (ADJUSTABLE TYPE) /80kgs

ORDER NO. VMB-03 MAGNETIC BASE HEIGHT ROD TYPE/130kgs

ORDER NO. VMB-181 MAGNETIC BASE /100kgs

ORDER NO. VMB-185 HYDRAULIC ARM MAGNETIC BASE /80KGS

※knob may vary & shpe & color

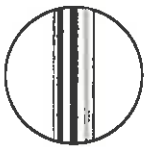

Big Dia. & Height Rod

- If you would like to turn around the ARM of VMB series, don't rotate the ARM directly, because the thread in the base will be disintegrated, please loose the knob first (in the middle of ARM), then the ARM will be rotated, thanks! After you set the position, Fix the Knob.
- Before you set the new position, you must loose the knob. Hold at the connection between Rod & Base to prevent thread breaking.

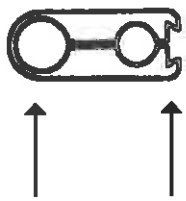

Ø8 Ø6.5

ORDER NO.	BASE SIZE LXWXH(MM)	HOLDING POWER	MAIN ROD O.D X L	SUB ROD O.D X L	WEIGHT (KGS)	CODE NO.
VMB-B	60X50X55	80KGS	Ø12X173	Ø10X162	1.6	2015-601
VMB-01	60X50X55	80KGS	Ø12X176	Ø10X150	1.6	2015-602
VMB-02	60X50X55	80KGS	Ø12X171	Ø10X153	1.6	2015-603
VMB-03	115X50X55	130KGS	Ø20X310	Ø14X200	3.9	2015-607
VMB-181	73x50x55	100KGS	Ø30X175.5	Ø21x137	1.9	2015-609A
VMB-185	73x50x55	100KGS	Ø31X124.5	Ø28x113	2.0	2015-609B

UNIVERSAL ARM TYPE VMB-70,106,106H WITHOUT DIAL
THE DIAL CLAMP HOLE Ø6.5 & Ø8

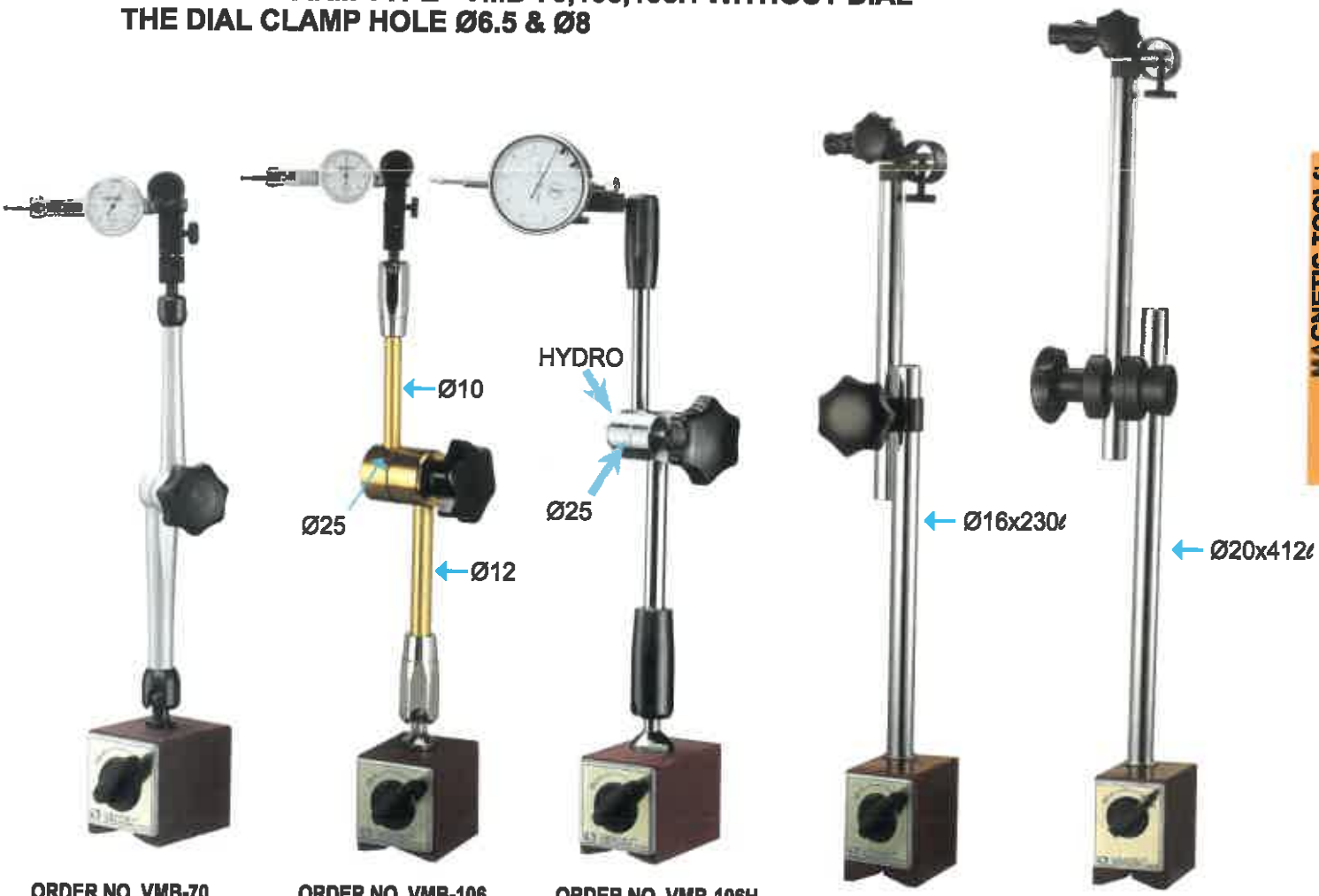

ORDER NO. VMB-70
DELUXE UNIVERSAL
MAGNETIC BASE /100kgs

ORDER NO. VMB-106
MECHANICAL ARM
MAGNETIC BASE /100kgs

ORDER NO. VMB-106H
HYDRAULIC ARM
MAGNETIC BASE /100kgs

ORDER NO. VMB-160
W/O DIAL INDICATOR

ORDER NO. VMB-180
W/O DIAL INDICATOR

※knob may vary
& shpe & color

- If you would like to turn around the ARM of VMB series, don't rotate the ARM directly, because the thread in the base will be disintegrated, please loose the knob first (in the middle of ARM), then the ARM will be rotated, thanks! After you set the position, Fix the Knob.
- Before you set the new position, you must loose the knob. Hold at the connection between Rod & Base to prevent thread breaking.
- Hold the Mag. Base while moving & lifting

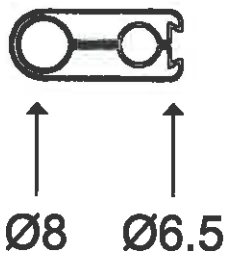

ORDER NO.	BASE SIZE LXWXH(MM)	HOLDING POWER	MAIN ROD O.D X L	SUB ROD O.D X L	WEIGHT (KGS)	CODE NO.
VMB-70	73X50X55	100KGS	Ø25X128	Ø25X116	1.7	2015-604
VMB-106	73X50X55	100KGS	Ø25X125	Ø25X125	1.9	2015-605
VMB-106H	75X50X55	100KGS	Ø25X125	Ø25X125	2.2	2015-606
VMB-160	70x46x60	100KGS	Ø16x230	Ø16x260	2.1	2015-608
VMB-180	75x60x80	100KGS	Ø20x412	Ø16x250	3.8	2015-609

Magnetic Tools

MICRO ADJUSTMENT

W/O MICRO ADJUSTMENT

ORDER NO. VMF-112
MINI MAGNETIC
BASE

ORDER NO. VMF-113
MINI MAGNETIC
BASE

VMF-102A

VMF-102B

ORDER NO. VMF-102A/B
MINI DELUXE UNIVERSAL
MAGNETIC BASE
SUITABLE FOR EDM USING.

ORDER NO. VH-70
MINI MAGNETIC
BASE
ROUND BASE OR
SQUARE BASE

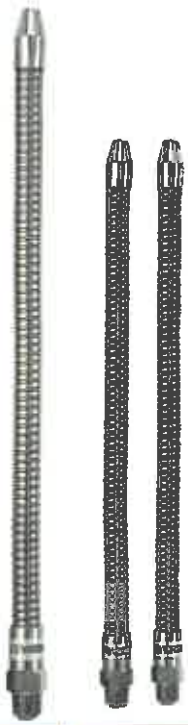

ORDER NO. VMS-1/4
ORDER NO. VMS-3/8
STEEL HOSE WITH
NOZZLE

※knob may vary
& shpe & color

ORDER NO.	BASE SIZE LXWXH(MM)	HOLDING POWER	MAIN ROD O.D X L	SUB ROD O.D X L	WEIGHT (KGS)	CODE NO.
VMF-112	34.5X30X35	30KGS	Ø20 X 70	Ø15 X 65	0.6	2015-619
VMF-113	34.5X30X35	30KGS	Ø20 X 70	Ø15 X 65	0.55	2015-619A
VH-70	31X31X32	15KGS	Ø10 X 70	Ø6 X 90	0.4	2015-620
VMF-102A	34.5X30X35	30KGS	Ø20 X 70	Ø20 X 65	0.57	2015-621A
VMF-102B	Ø31X31H	30KGS	Ø20 X 70	Ø15 X 65	0.5	2015-621B
VMS-1/4			Ø11 X 320	HOSE THREAD 1/4	0.2	2015-640
VMS-3/8			Ø15 X 370	HOSE THREAD 3/8	0.4	2015-641

ORDER NO. VMB-06
FLEXIBLE ARM
WITH MAGNETEC BASE

ORDER NO. VML-A
MAGNETIC BASE
WORKING BEAM
※FOR 20W/40W/60W 110V
※FOR 20W/40W/60W 220V

ORDER NO. VML-B
MAGNETIC BASE
WORKING BEAM
※FOR 20W/40W/60W 110V
※FOR 20W/40W/60W 220V

ORDER NO. VML-C
MAGNETIC BASE
WORKING BEAM
※FOR 20W/40W/60W 110V
※FOR 20W/40W/60W 220V

※knob may vary
& shpe & color

- If you would like to turn around the ARM of VMB series, don't rotate the ARM directly, because the thread in the base will be disintegrated, please loose the knob first (in the middle of ARM), then the ARM will be rotated, thanks!
  After you set the position, Fix the Knob.
  Before you set the new position, you must loose the knob.
  Hold at the connection between Rod & Base to prevent thread breaking.
- Hold the Mag. Base while moving & lifting

ORDER NO.	BASE SIZE LXWXH(MM)	HOLDING POWER	MAIN ROD O.D X L	WEIGHT (KGS)	CODE NO.
VMB-06	60X50X55	80KGS	Ø16X208	1.6	2015-610
VML-A	60X50X55	80KGS	Ø20X200	1.5	2015-611
VML-B	60X50X55	80KGS	Ø26X200	1.5	2015-612
VML-C	60X50X55	80KGS	Ø20X460	2.2	2015-616

Magnetic Tools

VERTEX®

ORDER NO. VMB-00
MAGNETIC BASE ONLY
M8X1.25p,80kgs

ORDER NO. VMB-09
MAGNETIC BASE ONLY
M8X1.25p,80kgs

ORDER NO. VMB-10
MAGNETIC BASE ONLY
M8X1.25p,100kgs

without dial gauge

ORDER NO. VTB-120
TESTER ARM BASE
please see page B81

Enlarge about : 2X

ORDER NO. VML-M
MAGNETIC BASE WITH
MAGNIFYING GLASS
M8X1.25p,80kgs

ORDER NO. VMB-11
MAGNETIC BASE ONLY
M8X1.25p,140kgs

ORDER NO. VMB-12
WHEEL DRESSER
CLAMP HOLE 12MM
WITHOUT DIAMOND
DRESSER PEN

- If you would like to turn around the ARM of VMB series, don't rotate the ARM directly, because the thread in the base will be disintegrated, please loose the knob first (in the middle of ARM), then the ARM will be rotated, thanks!
  After you set the position, Fix the Knob.
  Before you set the new position, you must loose the knob.
  Hold at the connection between Rod & Base to prevent thread breaking.
- Hold the Mag. Base while moving & lifting

※knob may vary & shpe & color

ORDER NO.	BASE SIZE LXWXH(MM)	HOLDING POWER	MAIN ROD O.D X L	WEIGHT (KGS)	CODE NO.
VMB-00	60X50X55	80KGS		1.1	2015-613
VMB-09	34.5X30X35	30KGS		0.2	2015-646
VMB-10	73X50X55	100KGS		1.25	2015-645
VMB-11	117X50X55	140KGS		2.1	2015-614
VMB-12	60X50X55	80KGS		1.1	2015-615
VML-M	60X50X55	80KGS	Ø15X325	1.7	2015-617
VTB-120	Ø120		Ø25 X 125	2.65	2022-015

ORDER NO. VMH-54
(2 HOSE)
MAGNETIC BASE
WITH HOSE NOZZLE

ORDER NO. VMH-62
(3 HOSE)
MAGNETIC BASE
WITH HOSE NOZZLE

ORDER NO. VMH-63
(1 HOSE)
MAGNETIC BASE
WITH STEEL NOZZLE

ORDER NO. VMH-64
(2 HOSE)
MAGNETIC BASE
WITH STEEL NOZZLE

ORDER NO. VMH-65
(3 HOSE)
MAGNETIC BASE
WITH STEEL NOZZLE

※knob may vary
& shpe & color

- Hold the Mag. Base while moving & lifting

ORDER NO.	BASE SIZE LXWXH(MM)	HOLDING POWER	MAIN ROD O.D X L	SUB ROD O.D X L	WEIGHT (KGS)	CODE NO.
VMH-54	60X50X55	80KGS	Ø16 X 330	2PCS.HOSE	1.4	2015-622
VMH-62	60X50X55	80KGS	Ø16 X 330	3PCS.HOSE	1.5	2015-623
VMH-63	60X50X55	80KGS	Ø11 X 330	1PCS.HOSE	1.6	2015-642
VMH-64	60X50X55	80KGS	Ø11 X 330	2PCS.HOSE	2	2015-643
VMH-65	60X50X55	80KGS	Ø11 X 330	3PCS.HOSE	2.2	2015-644

Thin Round Magnet

VERTEX®

NEW

VMH-D13, D30

VMH-T66, T80

- For Basic light Mag. force
- To combine with other tool
- To remove light weight iron object.
- I.D. Ø M6.6 / M8
- Can serve as hanger.

Unit : mm

ORDER NO.	HOLDING POWER	ØD	THICKNESS	WEIGHT (kg)	CODE NO.
VMH-D13	13 kgf	66	10.5	0.16	2015-711
VMH-D30	30 kgf	80	13.0	0.34	2015-712
VMH-T66	13 kgf	66	10.5	0.16	2015-716
VMH-T80	30 kgf	80	13.0	0.34	2015-717

Round Magnet Holder

NEW

VMD-R30

VMD-R50

VMD-S14

VMD-S20

- For Basic light Mag. force
- To combine with other tool
- To remove light weight iron object.
- Support for positioning
- Magnetic force only work on the bottom.

※Every magnet need to work under 70°C

ORDER NO.	HOLDING POWER	DIMEMSIONS	TAPPER HOLE	WEIGHT (KGS)	CODE NO.
VMD-R18	18 kgf	Ø 30 x 25	M6	0.12	2015-721
VMD-R30	30 kgf	Ø 40 x 30	M8	0.26	2015-722
VMD-R50	50 kgf	Ø 50 x 40	M8	0.54	2015-723
VMD-S14	14 kgf	26 x 26 x 25	-	0.12	2015-724
VMD-S20	20 kgf	26 x 60 x 25	M6	0.28	2015-725

Magnetic Tapper

VERTEX

NEW

※knob may vary & shpe & color

Cost higher

Example.

- MAX. stroke 60 mm
- Suit for large workpiece
- TAP thread capacity M3-M12
- Magnetic force 80 kgf
- Horizontal / Vertical
- Portable
- Great for machine case & thin plate tapping job.
- TAP & Iron piece not included.

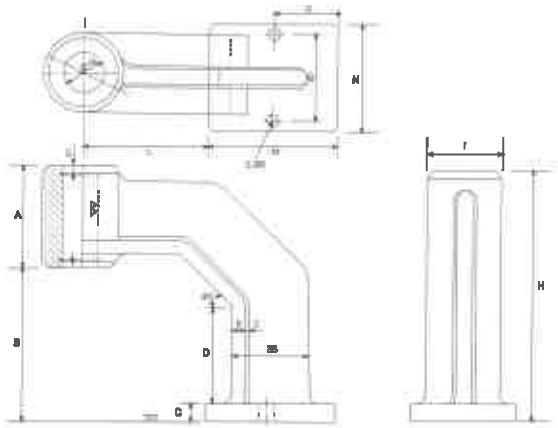

Unit : mm

ORDER NO.	A	B	C	D	H	I	L	M	N	O	WEIGHT (kgs)	CODE NO.
VTM-13	50	72	10	45	122	36	60	60	50	30	3.10	2015-731

Magnetic Clamp

Welder's Magnetic Ground Clamp

Heavy-duty steel housing holds a powerful magnet for fast, yet safe ground.
Ground wire will rotate 360˚ for easy access.
Equipped with a spring-loaded brass electrode, the magnetic ground clamps attach securely direct to work surface.

ORDER NO.	MASS	CUFT	L x W x H	WEIGHT (kg)	CODE NO.
VCC-30	10kgs	0.07'	70 x 52 m/m	0.48	2033-220
VCC-31	5.6kgs	0.05'	49 x 40 m/m	0.12	2033-221

Magnetic Quick Clamp

XL

L

M

ORDER NO.	SIZE	PACKING	MASS	CUFT	DIMENSION			WEIGHT (kg)	CODE NO.
					L	W	H		
VCC-33	M	Sliding Card	26kgs	0.03'	120	82	14	0.32	2033-223
VCC-34	L	Sliding Card	25kgs	0.03'	158	102	19	0.68	2033-224
VCC-35	XL	Sliding Card	10kgs	0.05'	202	128	21	1.13	2033-225

Multi-Function Mist Coolant System

VERTEX®

ORDER NO.VCS-500 CODE NO.2015-700

WEIGHT:0.8kg

FEATURES

- Flexible functions as cooling, lubrication and blowing the metal chips can be performed at the same time.
- Designed and manufactured for improving machinability, cutting speed, and extending tool service life, Saving working time and production cost.
- It insures better quality of parts finishing and cutting performance.
- The unit help to creat micro-finish effect even working on tough alloy steels and exotic metals.

This mist coolant systems are suited to fit on lathe, milling, drilling, tapping, grinding, cutter grinding, NC, CNC, press, sawing machine.....

EXAMPLE

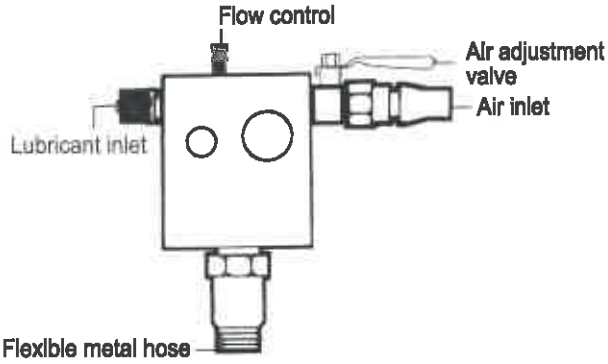

Mist Coolant With Magnetic Base

ORDER NO. VMH-71 (1 HOSE)
MAGNETIC BASE WITH
MIST COOLANT SYSTEM

ORDER NO.	BASE SIZE LXWXH(MM)	HOLDING POWER	MAIN ROD O.D X L	SUB ROD O.D X L	WEIGHT (kgs)	CODE NO.
VMH-71	62X50X55.5	75KGS	Ø15X500	1PCS.HOSE	2	2015-618

Diamond Dressing Tools

Installation And Operation

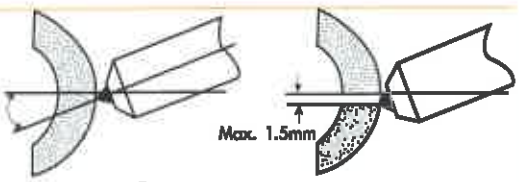

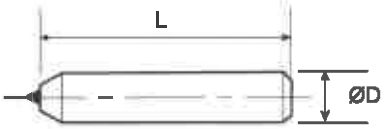

DRESSING PEN

SINGLE POINT DIAMOND DRESSERS

ORDER NO.	ØD x L	DIAMOND SIZE. wt.(cts.)	For Grinding Wheels Size(mm)	CODE NO.
VDR-1010	Ø10D x 80L	0.20	Ø150 x 25 or smaller	2015-665
VDR-1012	Ø12D x 100L	0.20		2015-666
VDR-3310	Ø10D x 80L	0.75	Ø150 ~ Ø300 x 25	2015-667
VDR-3312	Ø12D x 100L	0.75		2015-668
VDR-5010	Ø10D x 80L	1.0	Ø300 ~Ø450 x 25~40	2015-669
VDR-5012	Ø12D x 100L	1.0		2015-670

Adjustable Magnetic Nozzle Kit VERTEX®

CL-01

CL-02

CL-03

S-1 MAGNETIC FORCE 8kgs

- The adjustable magnetic nozzle is suitable for cooling and lubricating in machining process.
- Can be prolonged the cutter life and advance the accuracy and beauty of workpiece.
- By different of usage, there are much models for selection.
- Machine tool made by customer's specification and cooperated to develop.
- When using, please take out the spacer (under the magnetic base)

CL-01A

CL-02A

CL-03A

L2-S MAGNETIC FORCE 15kgs

WITH PLASTIC NOZZLE & VALVE
O.D.34XH230mm

WITH STEEL NOZZLE
O.D.68X330H

ORDER NO.	Weight	CODE NO.
CL-01	0.3kgs	2015-624
CL-02		2015-625
CL-03		2015-626
CL-01A		2015-627
CL-02A		2015-628
CL-03A		2015-629
S-1	0.2kgs	2015-630
L2-S	0.5kgs	2015-631

Adjustable Coolant Hose

- 4 kinds of orifice inner diameter are available: 1/4", 3/8", 1/2", and 3/4".
- Adjustable Coolant Hose is highly pliable; it holds its shape well and will not spring back.
- Made of Dupont 100P material, this highly rigid yet resilient acetal (POM) is strongly resistant to oils and chemicals.
- Adjustable Coolant Hose will not damage cutting blade if there were accident contact.
- Adjustable Coolent Hose does not conduct electricity and is good for operating on electrical discharge machine (EDM).
- Bending hose will not reduce inner diameter, hose will not pinch or fatigue.
- Adjustable Coolant Hose is designed for the transport of low-pressure fluids.

List of suitable fluids

Ordinary Adjustable Coolant Hoses are manufactured from acetal (POM), Hose is available in dark blue and orange colors.

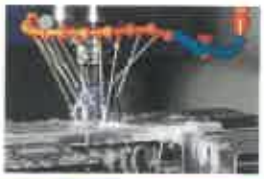

1/4" (6mm) 3/8" (9mm) 1/2" (12mm) 3/4" (20mm)

ITEM	SUITABLE	UNSUITABLE
ALCOHOLS, ETHUL	O	
ACIDS		X
ACETONE	O	
BASES, STRONG		X
AMMONIUM HYDROXIDE (STRONG)		X
COMMERCIAL DISH DETERGENTS	O	
GASOLINE	O	
GREASES	O	
HYPOCHLORITE LON SOLUTIONS		X
LACQUER SOLVENTS	O	
OILS	O	
SODIUM HYDROXIDE	O	
SODIUM HYPOCHLORITE		X
INSECTICIDES	O	
BRAKE OILS	O	

Caution:

our materials are good with alcohols, ethyl, acetone, commercial dish detergents, gasoline, greases, lacquer solvents, oils, sodium hydroxide, insecticides, and brake oils. Not good for acids, bases, strong, ammonium hydroxide(strong), Hypo-chlorite Lon solutions, sodium Hypochlorite. Use inappropriate liquids may cause damage.

Adjustable Coolant Hoses & Valves

VERTEX®

CODE NO. & DESCRIPTION	FIGURE

1/4" VALVE & HOSE KIT

62220
33CM Length Hose Kit
Assembled with:
1-Acid Resistant 1/4" Male NPT Valve
1-20 Element Segments
1-(1/16" or 1/8" or 1/4") Round Nozzle

ORDER NO. VHK-1/4A CODE NO.2016-001

ACID RESISTANT

62720
33CM Length Hose Kit
Assembled with:
1-1/4" Male NPT Valve
1-20 Element Segments
1-(1/16"or 1/8"or 1/4") Round Nozzle

ORDER NO. VHK-1/4 CODE NO.2016-002

3/8" VALVE & HOSE KIT

63320
36CM Length Hose Kit
Assembled with:
1-Acid Resistant 3/8" Male PT Valve
1-16 Element Segments
1-(1/4"or 3/8" or 1/2") Round Nozzle

ORDER NO. VHK-3/8A CODE NO.2016-003

ACID RESISTANT

63720
36CM Length Hose Kit
Assembled with:
1-3/8" Male PT Valve
1-16 Element Segments
1-(1/4" or 3/8" or 1/2") Round Nozzle

ORDER NO. VHK-3/8 CODE NO.2016-004

1/2" VALVE & HOSE KIT

64420
33CM Length Hose Kit
Assembled with:
1-Acid Resistant 1/2" Male NPT Valve
1-12 Element Segments
1-(1/4"or 3/8" or 1/2") Round Nozzle

ORDER NO. VHK-1/2A CODE NO.2016-005

ACID RESISTANT

64720
33CM Length Hose Kit
Assembled with:
1-1/2" Male NPT Valve
1-12 Element Segments
1-(1/4"or 3/8" or 1/2") Round Nozzle

ORDER NO. VHK-1/2 CODE NO.2016-006

3/4" VALVE & HOSE KIT

66720
44CM Length Hose Kit
Assembled with:
3/4" Male PT or NPT Valve

ORDER NO. VHK-3/4 CODE NO.2016-007

1/4" System

VERTEX®

1/4" INSIDE DIAMETER

FIG.	ITEM NO.	DESCRIPTION
	V-82020	1/4" Hose Kit 33 CM Length with Fittings: 2-14 CM Segments 1/16",1/8", 1/4" Nozzles 1/4" & 1/8" Male PT connectors CODE NO.2016-101
	V-82020A	1/4" Hose Kit 33 CM Length with Fittings: 2-14 CM Segments 1/16",1/8",1/4" Nozzles 1/4" & 1/8" Male NPT connectors CODE NO.2016-102
	V-82220	1/4" Extenden Element Kit with Element Clamps Includes 4 each of: 1/4" Extended Elements 1/4" Element Clamps CODE NO.2016-103
	V-82021	1/4" Segment pack (2-14CM 20pcs) CODE NO.2016-104-1
	V-82051	1/4" 1524 CM coil CODE NO.2016-104-2
	V-82071	1/4" 2500 Cm coil CODE NO.2016-104-3 Weight : 0.00177kg
	V-62423	1/4" Circle Flow Nozzle Kit Assembled with 15 Side Flow Nozzles 1/4" & 1 End Cap 1/4" CODE NO.2016-105
	V-82221	1/4" Extended Elements, pack of 4 CODE NO.2016-106
	V-82241	1/4" Exdended Elements, pack of 20 CODE NO.2016-107 Weight : 0.00641kg
	V-82222	1/4" Element Clamps, pack of 4 CODE NO.2016-108
	V-82242	1/4" Element Clamps, pack of 20 CODE NO.2016-109 Weight : 0.00265kg
	V-82326	1/4" 90° Nozzle Kit 1 Each: 1/16",1/8",1/4" & Spray Bar Nozzles CODE NO.2016-110
	V-82022	1/16" Round Nozzles Pack of 4 CODE NO.2016-111
	V-82042	1/16" Round Nozzles Pack of 50 CODE NO.2016-112 Weight : 0.0016kg
	V-82023	1/8" Round Nozzles Pack of 4 CODE NO.2016-113
	V-82043	1/8" Round Nozzles Pack of 50 CODE NO.2016-114 Weight : 0.00195kg
	V-82024	1/4" Round Nozzles Pack of 4 CODE NO.2016-115
	V-82044	1/4" Round Nozzles Pack of 50 CODE NO.2016-116 Weight : 0.00288kg
	V-82223	1/16" 90° Nozzles, pack of 4 CODE NO.2016-117
	V-82243	1/16" 90° Nozzles, pack of 20 CODE NO.2016-118 Weight : 0.00156kg
	V-82224	1/8" 90° Nozzles, pack of 4 CODE NO.2016-119
	V-82244	1/8" 90° Nozzles, pack of 20 CODE NO.2016-120 Weight : 0.00183kg

FIG.	ITEM NO.	DESCRIPTION
	V-82225	1/4"90° Nozzles, pack of 4 CODE NO.2016-121
	V-82245	1/4"90° Nozzles, pack of 20 CODE NO.2016-122 Weight : 0.00236kg
	V-82226	1/4"90° Spray Bar Nozzles, pack of 2 CODE NO.2016-123
	V-82246	1/4"90° Spray Bar Nozzles, pack of 20 CODE NO.2016-124 Weight : 0.00285kg
	V-82017	3/8"Flat Nozzles, pack of 2 CODE NO.2016-125
	V-82037	3/8"Flat Nozzles, pack of 20 CODE NO.2016-126 Weight : 0.00202kg
	V-82027	1"Flare Nozzles, pack of 2 CODE NO.2016-127
	V-82047	1"Flare Nozzles, pack of 20 CODE NO.2016-128 Weight : 0.00288kg
	V-82025	1/8"PT Connectors pack of 4 CODE NO.2016-129
	V-82035	1/8"-PT Connectors pack of 50 CODE NO.2016-130 Weight : 0.00232kg
	V-82025A	1/8"NPT Connectors pack of 4 CODE NO.2016-131
	V-82035A	1/8"NPT Connectors pack of 50 CODE NO.2016-132 Weight : 0.0023kg
	V-82026	1/4"PT Connectors pack of 4 CODE NO.2016-133
	V-82036	1/4"PT Connectors pack of 50 CODE NO.2016-134 Weight : 0.00259kg
	V-82026A	1/4"NPT Connectors pack of 4 CODE NO.2016-135
	V-82036A	1/4"NPT Connectors pack of 50 CODE NO.2016-136 Weight : 0.00267kg
	V-82028	1/4"Y Fitting Pack of 2 CODE NO.2016-137
	V-82038	1/4"Y Fitting Pack of 20 CODE NO.2016-138 Weight : 0.00269kg
	V-82011	1/4"Double Sockets, pack of 4 CODE NO.2016-139
	V-82031	1/4"Double Sockets, pack of 20 CODE NO.2016-140 Weight : 0.00177kg
	V-82012	1/4"Socket to 1/8" NPTF, pack of 4 CODE NO.2016-141
	V-82032	1/4"Socket to 1/8" NPTF, pack of 20 CODE NO.2016-142 Weight : 0.00287kg
	V-82013	3/8"SAE Flare Nut Adapters, pack of 4 CODE NO.2016-143
	V-82033	3/8"SAE Flare Nut Adapters, pack of 20(5/8-18 Thread) CODE NO.2016-144 Weight : 0.00397kg
	V-82014	1/4"SAE Flare Nut Adapters, pack of 4 CODE NO.2016-145
	V-82034	1/4"SAE Flare Nut Adapters, pack of 20 (7/16-20 Thread) CODE NO.2016-146 Weight : 0.00167kg
	V-62420	1/4"Elbow Fittings pack of 2 CODE NO.2016-147
	V-62430	1/4"Elbow Fittings pack of 20 CODE NO.2016-148 Weight : 0.00242kg
	V-62426	1/4" T Fitting pack of 2 CODE NO.2016-149
	V-62436	1/4" T Fitting pack of 20 CODE NO.2016-150 Weight : 0.00375kg
	V-62422	1/4" Side Flow Nozzles, pack of 4 CODE NO.2016-151
	V-62442	1/4" Side Flow Nozzles, pack of 20 CODE NO.2016-152 Weight : 0.00275kg

FIG.	ITEM NO.	DESCRIPTION
	V-62424	1/4"End Caps, pack of 4 CODE NO.2016-153-1
	V-62444	1/4"End caps, pack of 20 CODE NO.2016-153-2 Weight : 0.00191kg
	V-82228	1/4"Swivel Nozzle 40, pack of 2 CODE NO.2016-154
	V-82248	1/4"Swivel Nozzle 40, pack of 20 CODE NO.2016-155 Weight : 0.00875kg
	V-82229	1/4"Swivel Nozzle 60, pack of 2 CODE NO.2016-156
	V-82249	1/4"Swivel Nozzle 60, pack of 20 CODE NO.2016-157 Weight : 0.00845kg
	V-82721	1/4"NPT Male Hose Nipple Valves pack of 2 CODE NO.2016-158
	V-82731	1/4"NPT Male Hose Nipple Valves pack of 10 CODE NO.2016-159 Weight : 0.0076kg
7.8g		
	V-82722	1/4"Connection Valves, pack of 2 CODE NO.2016-162
	V-82732	1/4"Connection Va.lves, pack of 10 CODE NO.2016-163 Weight : 0.00693kg
	V-82522	Acid Resistant 1/4"Connection Valves, pack of 2 CODE NO.2016-164
	V-82532	1/4"Connection Valves, pack of 10 CODE NO.2016-165 Weight : 0.00702kg
	V-82723	1/4"Male PT Valves, pack of 2 CODE NO.2016-166
	V-82733	1/4"Male PT Valves, pack of 10 CODE NO.2016-167 Weight : 0.0076kg
	V-82523	Acid Resistant 1/4"Male NPT Valves, pack of 2 CODE NO.2016-168
	V-82533	1/4"Male NPT Valves, pack of 10 CODE NO.2016-169 Weight : 0.00774kg
	V-82724	1/4"Female PT Valves, pack of 2 CODE NO.2016-170
	V-82744	1/4"Female PT Valves, pack of 10 CODE NO.2016-171 Weight : 0.00809kg
	V-82524	Acid Resistant 1/4"Female NPT Valves, pack of 2 CODE NO.2016-172
	V-82534	1/4"Female NPT Valves, pack of 10 CODE NO.2016-173 Weight : 0.00836kg
	V-82725	1/4"Connection Check Valves,pack of 2 CODE NO.2016-174
	V-82745	1/4"Connection Check Valves,pack of 10 CODE NO.2016-175 Weight : 0.00562kg
	V-52400	Modular Manifold System 1/4" 1/4"Elbow Fitting-1 pcs 1/4"Manifold Bracket-1 pcs 1/4"T Fittings-3 pcs 1/4"Mounting screw-3 pcs CODE NO.2016-176 Weight : 0.0322kg
	V-52410	1/4"Main Flow Control Manifold System 1/4"Modular Manifold-1 pcs 1/4"Connection Valves-5 pcs CODE NO.2016-177 Weight : 0.0675kg
	V-52416	1/4"Manifold Brackets pack of 2 CODE NO.2016-178 Weight : 0.00973kg
	V-26171	1/4"Hose Assembly pliers CODE NO.2016-179

COOLANT HOSE

1/2" System

VERTEX

1/2" INSIDE DIAMETER

FIG.	ITEM NO.	DESCRIPTION
	V-84040	1/2" Hose Kit 33 CM Length with Fittings: 2-14 CM Segments 1/4", 3/8",1/2" Nozzles 3/8",1/2" Male PT connectors CODE NO. 2016-201
	V-84040A	1/2" Hose Kit 33 CM Length with Fittings: 2-14 CM Segments 1/4",3/8", Nozzles 3/8",1/2" Male NPT connectors CODE NO. 2016-202
	V-84440	1/2" Extended Element Kit with Element Clamps Includes 4 each of: 1/2" Extended Elements 1/2" Element Clamps CODE NO. 2016-203
	V-84041	Segment pack (2-14 CM 12pcs) CODE NO. 2016-204
	V-84081	1/2" 1524 CM coil CODE NO. 2016-205
	V-84091	1/2" 2500 CM coil CODE NO. 2016-206 Weight : 0.00555kg
	V-64643	1/2" Circle Flow Nozzle Kit Assembled with 15 Side Flow Nozzles 1/2" & 1 End Cap 1/2" CODE NO. 2016-207
	V-84441	1/2" Extended Elements, pack of 4 CODE NO. 2016-208
	V-84461	1/2" Extended Elements, pack of 20 CODE NO. 2016-209 Weight : 0.01186kg
	V-84346	90° Nozzle Kit 1 Each: 1/4",3/8",1/2" & Spray Bar Nozzles CODE NO. 2016-210
	V-84044	1/4" Round Nozzles, pack of 4 CODE NO. 2016-211
	V-84064	1/4" Round Nozzles, pack of 50 CODE NO. 2016-212 Weight : 0.00339kg
	V-84042	3/8" Round Nozzles, pack of 4 CODE NO. 2016-213
	V-84062	3/8" Round Nozzles, pack of 50 CODE NO. 2016-214 Weight : 0.0435kg
	V-84043	1/2" Round Nozzles, pack of 4 CODE NO. 2016-215
	V-84063	1/2" Round Nozzles, pack of 50 CODE NO. 2016-216 Weight : 0.0597kg
	V-84443	1/4"90° Nozzles, pack of 4 CODE NO. 2016-217
	V-84463	1/4" 90° Nozzles, pack of 20 CODE NO. 2016-218 Weight : 0.0053kg
	V-84444	3/8" 90° Nozzles, pack of 4 CODE NO. 2016-219
	V-84464	3/8" 90° Nozzles, pack of 20 CODE NO. 2016-220 Weight : 0.00566kg

FIG.	ITEM NO.	DESCRIPTION
	V-84445	1/2"90° Nozzles, pack of 4 CODE NO. 2016-221
	V-84465	1/2"90° Nozzles, pack of 20 CODE NO. 2016-222 Weight : 0.00552kg
	V-84446	1/2"90° Spray Bar, pack of 2 CODE NO. 2016-223
	V-84466	1/2"90° Spray Bar, pack of 20 CODE NO. 2016-224 Weight : 0.01033kg
	V-84047	1 1/4"Flare Nozzles, pack of 2 CODE NO. 2016-225
	V-84067	1 1/4"Flare Nozzles, pack of 20 CODE NO. 2016-226 Weight : 0.00696kg
	V-84050	1 3/4"Flare Nozzles, pack of 2 CODE NO. 2016-227
	V-84070	1 3/4"Flare Nozzles, pack of 20 CODE NO. 2016-228 Weight : 0.0088kg
	V-84052	2 1/2"Flare Nozzles, pack of 2 CODE NO. 2016-229
	V-84072	2 1/2"Flare Nozzles, pack of 20 CODE NO. 2016-230 Weight : 0.00922kg
	V-84046	3/8"PT Connectors pack of 4 CODE NO. 2016-231
	V-84066	3/8"PT Connectors pack of 50 CODE NO. 2016-232 Weight : 0.0063kg
	V-84046A	3/8"NPT Connectors pack of 4 CODE NO. 2016-233
	V-84066A	3/8"NPT Connectors pack of 50 CODE NO. 2016-234 Weight : 0.00602kg
	V-84045	1/2"PT Connectors pack of 4 CODE NO. 2016-235
	V-84065	1/2"PT Connectors pack of 50 CODE NO. 2016-236 Weight : 0.00732kg
	V-84045A	1/2"NPT Connectors pack of 4 CODE NO. 2016-237
	V-84065A	1/2"NPT Connectors pack of 50 CODE NO. 2016-238 Weight : 0.00669kg
	V-84048	1/2"Y Fittings pack of 2 CODE NO. 2016-239
	V-84068	1/2"Y Fittings pack of 20 CODE NO. 2016-240 Weight : 0.0108kg
	V-84049	1/2" to 1/4" Y Reducers, pack of 2 CODE NO. 2016-241
	V-84069	1/2" to 1/4" Y Reducers, pack of 20 CODE NO. 2016-242 Weight : 0.00608kg
	V-84651	1/2"to 1/4" Adapters, pack of 2 CODE NO. 2016-243
	V-84851	1/2"to 1/4" Adapters, pack of 20 CODE NO. 2016-244 Weight : 0.00452kg
	V-84011	1/2"Double Sockets, pack of 4 CODE NO. 2016-245
	V-84031	1/2"Double Sockets, pack of 20 CODE NO. 2016-246 Weight : 0.00452kg
	V-84013	1/4"SAE Flare Nut Adapters,pack of 4 CODE NO. 2016-247
	V-84033	1/4"SAE Flare Nut Adapters,pack of 20 (5/8-18 Thread) CODE NO. 2016-248 Weight : 0.00516kg
	V-64620	1/2" Elbow Fittings, pack of 2 CODE NO. 2016-249
	V-64640	1/2" Elbow Fittings, pack of 20 CODE NO. 2016-250 Weight : 0.00666kg

FIG.	ITEM NO.	DESCRIPTION
	V-64626	1/2"T Fittings, pack of 2 CODE NO. 2016-251
	V-64646	1/2"T Fittings, pack of 20 CODE NO. 2016-252 Weight : 0.0097kg
	V-64622	1/2"Side Flow Nozzles, pack of 4 CODE NO. 2016-253
	V-64642	1/2"Side Flow Nozzles, pack of 20 CODE NO. 2016-254 Weight : 0.0078kg
	V-64624	1/2"End caps, pack of 4 CODE NO. 2016-255
	V-64644	1/2"End caps, pack of 20 CODE NO. 2016-256 Weight : 0.00466kg
	V-84722	1/2"connection Valves, pack of 2 CODE NO. 2016-257
	V-84742	1/2"connection Valves, pack of 10 CODE NO. 2016-258 Weight : 0.02201kg
	V-84522	Acid Resistant 1/2"connection Valves, pack of 2 CODE NO. 2016-259
	V-84542	1/2"connection Valves, pack of 10 CODE NO. 2016-260 Weight : 0.02227kg
	V-84723	1/2"Male PT Valves, pack of 2 CODE NO. 2016-261
	V-84743	1/2"Male PT Valves, pack of 10 CODE NO. 2016-262 Weight : 0.02287kg
	V-84523	Acid Resistant 1/2"Male NPT Valves, pack of 2 CODE NO. 2016-263
	V-84543	1/2"Male NPT Valves, pack of 10 CODE NO. 2016-264 Weight : 0.02308kg
	V-84724	1/2"Female PT Valves, pack of 2 CODE NO. 2016-265
	V-84744	1/2"Female PT Valves, pack of 10 CODE NO. 2016-266 Weight : 0.02348kg
	V-84524	Acid Resistant 1/2"Female NPT Valves, pack of 2 CODE NO. 2016-267
	V-84544	1/2"Female NPT Valves, pack of 10 CODE NO. 2016-268 Weight : 0.02286kg
	V-84725	1/2"connection Chuck Valves, pack of 2 CODE NO. 2016-269
	V-84745	1/2"connection Chuck Valves, pack of 10 CODE NO. 2016-270 Weight : 0.00878kg
	V-54400	Modular Manifold System 1/2" 1/2"-Elbow Fitting-1 pcs 1/2"-Manifold Bracket-1 pcs 1/2"-T Fittings-3 pcs 1/2"-Mounting screws-3 pcs CODE NO. 2016-271 56.2g Weight : 0.0562kg
	V-54410	Main Flow Control Manifold System1/2" 1-Modular Manifold1/2" 5-Connection Valves1/2" CODE NO. 2016-272 Weight : 0.16625kg
	V-54416	1/2"Manifold Brackets of 2 CODE NO. 2016-273 Weight : 0.01148kg
	V-26172	1/2"Hose Assembly pliers CODE NO. 2016-274

3/8" System

VERTEX®

3/8" INSIDE DIAMETER

FIG.	ITEM NO.	DESCRIPTION
	V-83030	3/8" Hose Kit 8 pcs of 3/8" Segment - 2 sets 3/8" Nozzles 3/8" Male PT connectors CODE NO.2016-275
	V-83030A	3/8" Hose Kit 8 pcs of 3/8" Segment - 2 sets 3/8" Nozzles 13/8" Male NPT connectors CODE NO.2016-276
	V-83430	3/8" Hose Kit 8 pcs of 3/8" Segment - 2 pcs 1/4", 3/8", 1/2" Nozzles 3/8" & 1/2" Male PT connectors CODE NO.2016-277
	V-83430A	3/8" Hose Kit 8 pcs of 3/8" Segment - 2 pcs 1/4", 3/8", 1/2" Nozzles 3/8" & 1/2" Male NPT connectors CODE NO.2016-278
	V-83031	3/8" Segment pack (2-14.5CM 8pcs) CODE NO.2016-279
	V-83051	3/8" 762 CM coil CODE NO.2016-280
	V-83091	3/8" 1524 CM coil Weight: 2.8kgs CODE NO.2016-281
	V-83032	1/4" Round Nozzles, Pack of 4 CODE NO.2016-282
	V-83052	1/4" Round Nozzles, Pack of 50 CODE NO.2016-283

FIG.	ITEM NO.	DESCRIPTION
	V-83033	3/8" Round Nozzles, pack of 4 CODE NO.2016-2016-284
	V-83053	3/8" Round Nozzles, pack of 50 CODE NO.2016-2016-285 Wight: 197.2g
	V-83034	1/2" Round Nozzles, pack of 4 CODE NO.2016-286
	V-83054	1/2" Round Nozzles, pack of 50 CODE NO.2016-287
	V-83026	1/4" PT Connector, pack of 4 CODE NO.2016-288
	V-83046	1/4" PT Connector, pack of 50 CODE NO.2016-289
	V-83035	3/8" PT Connector, pack of 4 CODE NO.2016-290
	V-83055	3/8" PT Connector, pack of 50 CODE NO.2016-291
	V-83035A	3/8" NPT Connector, pack of 4 CODE NO.2016-292
	V-83055A	3/8" NPT Connector, pack of 50 CODE NO.2016-293
	V-83036	1/2" PT Connector, pack of 4 CODE NO.2016-294
	V-83056	1/2" PT Connector, pack of 50 CODE NO.2016-295
	V-83036A	1/2" NPT Connector, pack of 4 CODE NO.2016-296
	V-83056A	1/2" NPT Connector, pack of 50 CODE NO.2016-297

FIG.	ITEM NO.	DESCRIPTION
	V-83037	1 1/4" Flare Nozzles, pack of 2 CODE NO.2016-298
	V-83057	1 1/4" Flare Nozzles, pack of 20 CODE NO.2016-299
	V-83723	3/8" Male PT Valve, pack of 2 CODE NO.2016-302
	V-83743	3/8" Male PT Valve, pack of 10 CODE NO.2016-303 Wight: 127g
	V-83723A	3/8" Male NPT Valve, pack of 2 CODE NO.2016-304
	V-83743A	3/8" Male NPT Valve, pack of 10 CODE NO.2016-305
	V-83724	3/8" Female PT Valve, pack of 2 CODE NO.2016-306
	V-83744	3/8" Female PT Valve, pack of 10 CODE NO.2016-307
	V-83724A	3/8" Female NPT Valev, pack of 2 CODE NO.2016-308
	V-83744A	3/8" Female NPT Valev, pack of 10 CODE NO.2016-309
	V-26176	3/8" Hose Assembly pliers CODE NO.2016-310

COOLANT HOSE

3/4" System

3/4" INSIDE DIAMETER

FIG.	ITEM NO.	DESCRIPTION
	V-86060	3/4" Hose Kit 6 pcs of 3/4" Segment-2 sets 5/8" & 3/4" Nozzles 3/4" Male PT Connector CODE NO.2016-400
	V-86060A	3/4" Hose Kit 6 pcs of 3/4" Segment-2 sets 5/8" & 3/4" Nozzles 3/4" Male PT Connector CODE NO.2016-401
	V-86061	3/4" Segment Pack (2-15 CM 6pcs) CODE NO.2016-402
	V-86081	3/4" 1524 CM Coil CODE NO.2016-403
	V-86091	3/4" 2500 CM Coil CODE NO.2016-404
	V-86063	5/8" Round Nozzle, pack of 4 CODE NO.2016-405
	V-86073	5/8" Round Nozzle, pack of 50 CODE NO.2016-406
	V-86062	3/4" Round Nozzle, pack of 4 CODE NO.2016-407
	V-86072	3/4" Round Nozzle, pack of 50 CODE NO.2016-408
	V-86064	3/4" PT Connector pack of 4 CODE NO.2016-409
	V-86074	3/4" PT Nozzle, pack of 50 CODE NO.2016-410
	V-86064A	3/4" NPT Connector pack of 4 CODE NO.2016-411
	V-86074A	3/4" NPT Nozzle, pack of 50 CODE NO.2016-412

FIG.	ITEM NO.	DESCRIPTION
	V-86021	3/4" Fixed Mount, pack of 2 CODE NO.2016-413
	V-86022	3/4" Magnetic Base, pack of 1 CODE NO.2016-414
	V-86023	Shield Mounting Elbow, pack of 2 CODE NO.2016-415
	V-86067	3" Flare Nozzle, pack of 2 CODE NO.2016-416
	V-86077	3" Flare Nozzle, pack of 20 CODE NO.2016-417
	V-86068	3/4" Y Fitting, pack of 2 CODE NO.2016-418
	V-86078	3/4" Y Fitting, pack of 20 CODE NO.2016-419
	V-86069	3/4" to 1/2" Y Reducer, pack of 2 CODE NO.2016-420
	V-86079	3/4" to 1/2" Y Reducer, pack of 20 CODE NO.2016-421
	V-86051	3/4" to 1/2" Adapter, pack of 2 CODE NO.2016-422
	V-86071	3/4" to 1/2" Adapter, pack of 20 CODE NO.2016-423
	V-86011	3/4" Double Socket, pack of 4 CODE NO.2016-424
	V-86031	3/4" Double Socket, pack of 20 CODE NO.2016-425

FIG.	ITEM NO.	DESCRIPTION
	V-26177	3/4" Hose Assembly Pliers CODE NO.2016-426

Paper Filter

FEATURES

- Appllicable to both ferrous and non-ferrous metals.
- Filtration effect depends on paper accuracy. Use 50μ,30μ,or 15μ.
- Not suitable for heavy machining for the sake of paper consumption.
- To save filtration material, use magnetic filter for roung filtration.
- Standard accessory:one roll of paper.

※Guaranteed for 3 months.

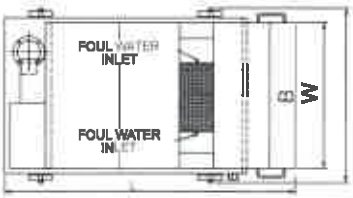

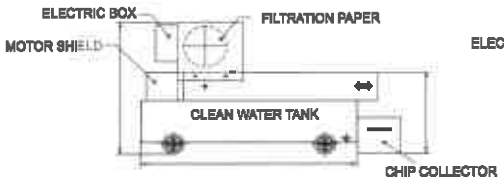

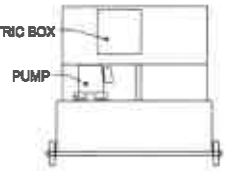

ORDER NO.	DISPOSAL CAPACITY L/MIN	WATER TANK CAPACITY	L	A	B	C	W	H	PUMP		PAPER MOTOR	PAPER	REMARKS	N.W (kgs)	GW (kgs)	CODE NO.
									HP	OUTLET						
PF-20	20	100ℓ	1050	850	600	400	720	610	1/8	PF1/2"	25W	W:500MM L:90M	wheels attached	95	120	2020-001
PF-40	40	120ℓ	1200	1000	600	400	720	660	1/8	PF1/2"	25W			130	150	2020-002
PF-60	60	140ℓ	1350	1150	600	400	720	660	1/8	PF1/2"	25W			140	170	2020-003
PF-80	80	160ℓ	1500	1300	600	400	720	660	1/4	PF3/4"	25W			170	190	2020-004
PF-120	120	210ℓ	1500	1300	800	400	920	740	1/2	PF3/4"	40W	W:700MM L:90M		185	210	2020-005
PF-160	160	260ℓ	1800	1600	800	400	920	740	1/2	PF3/4"	40W			250	280	2020-006

Magnetic Separator

FEATURES

- Suitable in heavy machining for ferrous metal.
- No filtration-material consumption.
- Most economic in purchase & utilization cost.
- Able to serve rough filtration in other filtration process.
- Please notify volta & phase, when you ordering.

※Guaranteed for 3 months.

MC-60

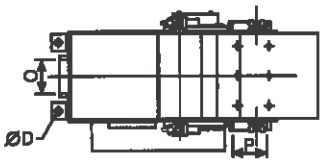

MC-20~160

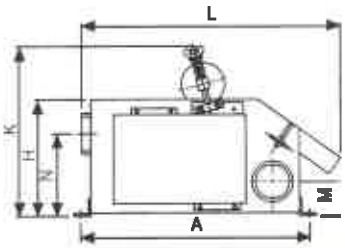

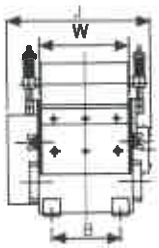

Standard accessories

a.Chip collector 1pc

b.plugs 2pc

c.Elbow 1pc

d.Steel tubes 3pc

ORDER NO.	DISPOSAL CAPACITY L/MIN	L	W	H	M	N	A	B	D	J	K	INLET O	OUTLET P	MOTOR	N.W (kgs)	GW (kgs)	CODE NO.
MC-20	20	464	130	205	65	145	398	100	11	230	300	PF1 1/2"	PF1 1/2"	220V3Ø 25W	18	20	2020-010
MC-40	40	464	150	205	65	145	398	120	11	250	300	PF2"	PF2"	220V3Ø,25W	20	23	2020-011
MC-60	60	464	206	205	60	150	398	176	11	306	300	PF2"	PF2"	220V3Ø,25W	25	28	2020-012
MC-80	80	464	242	205	60	150	398	212	11	342	300	PF2"	PF1 1/2"	220V3Ø 25W	30	40	2020-013
MC-120	120	530	270	245	68	185	456	230	11	380	345	PF1 1/2"	PF3"	220V3Ø 40W	50	65	2020-014
MC-160	160	530	354	245	68	185	456	314	11	464	345	PF3"	PF3"	220V3Ø 40W	60	75	2020-015

Magnetic Separator & Paper Filter VERTEX®

MC+PF60

APPLICABLE TO THE FOLLOWING WORKING MACHINES

- Plane grinding machine.
- Fine-grinding machine.
- Honing machine.
- Deep-hole drill.
- Internal/exterless cylinder grinder.
- Centerless grinder.
- Please specify the power voltage in your order list.
- Specifications are subject to change without notice.
- Please notify volta & phase, when you ordering.

※Guaranteed for 3 months.

FEATURES

- Applicable to both ferrous and non-ferrous metals.
- Filtration effect depends on paper accuracy. Use 50μ,30μ,or 15μ.
- Rough filtration for chip in coolant with magnet and then fine filtration for impurities with paper will save the paper and upgrade filtration accuracy

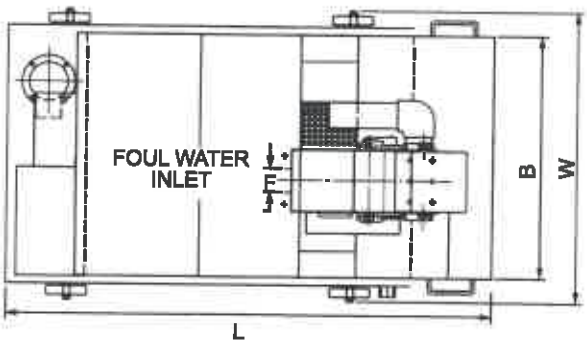

DIMENSION DIAGRAM

- Standard accessory:one roll paper 30μ

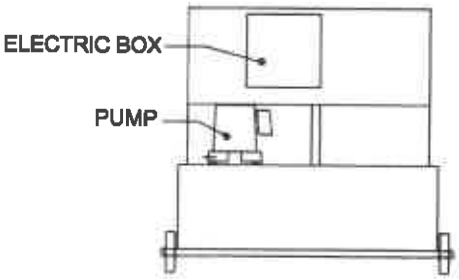

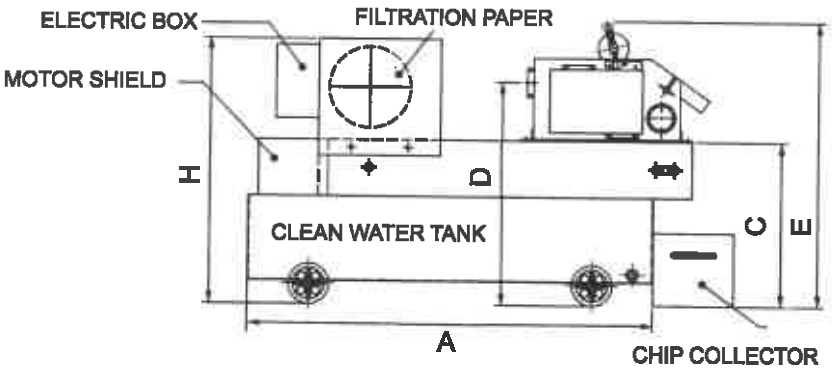

MAGNETIC SEPARATOR & PAPER FILTER SPECIFICATIONS

ORDER NO.	DISPOSAL CAPACITY L/MIN	WATER TANK CAPACITY	L	A	B	C	D	E	F	H	W	PUMP HP	PUMP OUTLET	PAPER MOTOR	PAPER	REMARKS	N.W (kgs)	GW (kgs)	CODE NO.
MC+PF-20	20	100 ℓ	1050	850	600	400	550	655	PF1 1/2"	610	720	1/8	PF1/2"	25W	W:500MM L:90M	wheels	115	140	2020-020
MC+PF-40	40	120 ℓ	1200	1000	600	400	550	705	PF2"	660	720	1/8	PF1/2"	25W			150	175	2020-021
MC+PF-60	60	140 ℓ	1350	1150	600	400	555	705	PF2"	660	720	1/8	PF1/2"	25W			165	200	2020-022
MC+PF-80	80	160 ℓ	1500	1300	600	400	555	705	PF2"	660	720	1/4	PF3/4"	25W			190	225	2020-023
MC+PF-120	120	210 ℓ	1500	1300	800	400	590	750	PF2 1/2"	740	920	1/2	PF3/4"	40W	W:700MM L:90M		235	275	2020-024
MC+PF-160	180	260 ℓ	1800	1600	800	400	605	750	PF3"	740	920	1/2	PF3/4"	40W			290	335	2020-025

Coolant Tank Dust Collector VERTEX®

● WATER TANK CAPACITY 40 ℓ

Unit: mm

ORDER NO.	LxWxH	Motor	G.W.	CODE NO.
VC-601	500x300x530	1/8 HP	23kgs	2020-030

● WATER TANK CAPACITY 10 ℓ

Unit: mm

ORDER NO.	LxWxH	Motor	G.W.	CODE NO.
VC-602	560x370x720	1/2 HP	47kgs	2020-026

Dust-Suction And Coolant Tank

TWO IN ONE

PLEASE NOTIFY VOLTA & PHASE, WHEN YOU ORDERING.

Combination coolant and dust collector(10-12 J)

1. Dust suction motor
2. Coolant pump
3. Filter access door
4. Filter
5. Coolant return pipe
6. Dust inlet pipe
7. Pump outlet

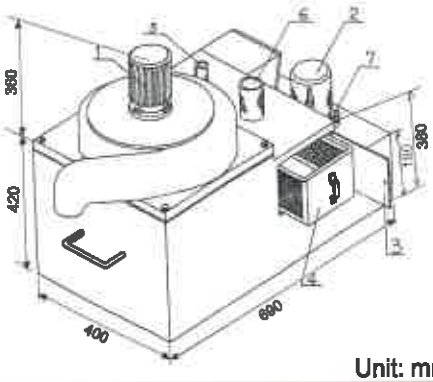

● WATER TANK CAPACITY 45 ℓ

Unit: mm

ORDER NO.	LxWxH	Motor	G.W.	CODE NO.
VC-603	690x400x780	1/2 HPx1, 1/8 HPx1	80kgs	2020-027

Dust-Suction & Coolant Tank W/Magnetic Separator

THREE IN ONE

PLEASE NOTIFY VOLTA & PHASE, WHEN YOU ORDERING.

● WATER TANK CAPACITY 45 ℓ

Unit: mm

ORDER NO.	LxWxH	Motor	G.W.	CODE NO.
VC-606	900x780x850	1/2 HPx1, 1/8 HPx1	110kgs	2020-028

Oil Skimmer With Belt Type

VERTEX

OIL SKIMMER FOR MACHINE TOOL.
IT IS FOR CLEAR FLOATING OIL ON CUTTING LIQUID.

ORDER NO. VOS-800

ORDER NO. VOS-810

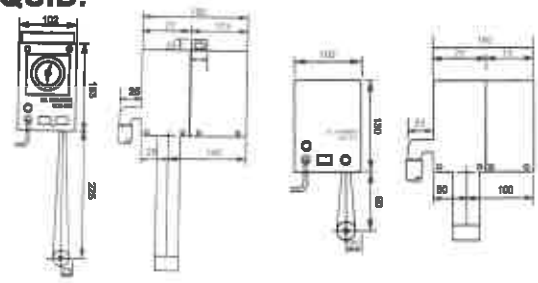

FEATURES

- Oily leather belt cycle for collecting oil and efficiently and completely getting rid of diryt oil.
- Much less cost of running., without any material expended.
- Small volume., light weight., easy to install and to operate.
- Special leather belt with feature of excellent durability, heat-resistance, and chemical-resistance.
- VOS-800 attached a 24 hours procedure timer to run repeatly in accordance with time proportion which it is set, and also provides the best efficiency of sucking floating oil.

Unit: mm

ORDER NO.	POWER SOURCE	CAPACITY	DIMENSION			WEIGHT (kgs)	BELT DIMENSION		DIMENSION OF HOSE	CODE NO.
			L	B	H		B	L		
VOS-800	AC 110/220V	4L/h	190 mm	102 mm	153 mm	3.4	39x800 mm		ø22x600 mm	2020-100
VOS-810			150 mm	102 mm	138 mm	3	39x550 mm			2020-101

Oil Skimmer With Belt Type

WITH TIMER

ORDER NO. VOS-820

OUTLET TUBE

INLET TUBE

ORDER NO. VOS-830

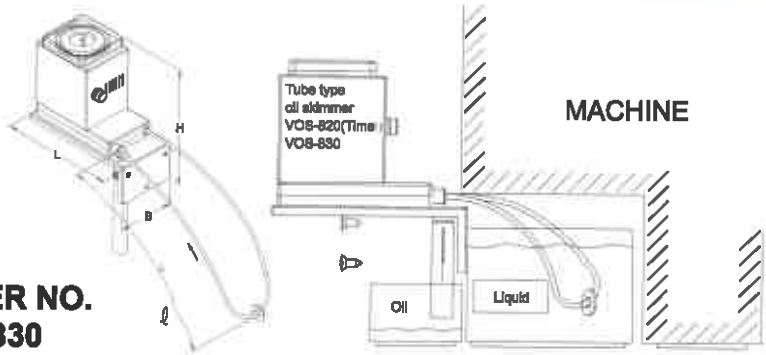

IF THE MACHINE DON'T HAVE SPACE FOR THE OIL SKIMMER. PLEASE CHOICE THIS TYPE.

Unit: mm

ORDER NO.	CAPACITY	DIMENSION			INLET TUBE SIZE	QUTLET TUBE SIZE		POWER SOVRCE	WEIGHT (kg)	CODE NO.
		L	B	H						
VOS-820	1L/hr	155 mm	78 mm	178 mm	I 2:300 mm I 3:200 mm	ø22	150 mm	AC 110/220V	1.9	2020-102
VOS-830		155 mm	78 mm	140 mm					2	2020-103

Oil Skimmer With Rotary Plate Type

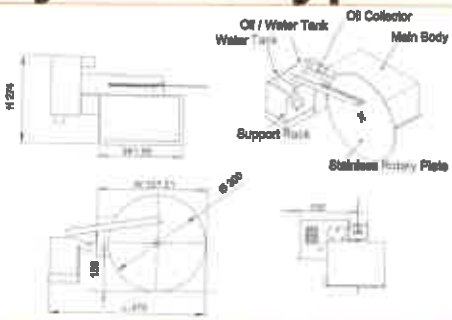

Unit: mm

ORDER NO.	CAPACITY	POWER SOURCE	DIMENSION			WEIGHT (kgs)	CODE NO.
			L	W	H		
VOS-850	1L/hr	AC 220V	479	337.21	274	8.6	2020-104

Precision Gauge Blocks

VERTEX®

Gauge blocks are fundamental standards for linear measurement. For adjusting, checking. or inspecting measuring instruments and tools, and precision workpieces. Gauge blocks are used either individually or in combination of several blocks which are wrung together.
Steel gauge blocks are made of quality alloy steel. and carbide, the ceramics are also avilable.
The hardness number of the measuring surfaces is no less than HRC64°.
The blocks have fine wear resistance, They are heat treated in special ways so as to stabilize their lengths.

JIS/ISO/DIN	ACCURACY STANDARD	
SIZE	ACCURACY AT 20°C (μm)	
OVER UP TO	GRADE 00	GRADE 0
10mm	±0.06	±0.12
10 - 25mm	+0.07	±0.14
25 - 50mm	±0.10	±0.20
50 - 75mm	±0.12	±0.25
75 - 100mm	±0.14	±0.30
100 - 150mm	-	±0.40

SIZE	ACCURACY AT 20°C (μm)	
OVER UP TO	GRADE 1	GRADE 2
10mm	±0.20	±0.45
10 - 25mm	±0.30	±0.60
25 - 50mm	±0.40	±0.80
50 - 75mm	±0.50	±1.00
75 - 100mm	±0.60	±1.20
100 - 150mm	±0.80	±1.60

STEEL METRIC GAUGE BLOCKS

ORDER NO.	Total blocks	Nominal dimension	Steps	No. of blocks	Grade	Weight (kg)	CODE NO.
VGB-112-0	112	1.0005 1.001-1.009 1.01-1.49 0.5-24.5 25-100	- 0.001 0.01 0.05 25	1 9 49 49 4	0	3.7	2006-070
VGB-112-1					1	3.7	2006-170
VGB-112-2					2	3.7	2006-270
VGB-103-0	103	1.005 1.01-1.49 0.5-24.5 25-100	- 0.01 0.5 25	1 49 49 4	0	3.6	2006-072
VGB-103-1					1	3.6	2006-172
VGB-103-2					2	3.6	2006-272
VGB-87-0	87	1.001-1.009 1.01-1.49 0.5-9.5 10-100	0.001 0.01 0.5 10	9 49 19 10	0	3	2006-073
VGB-87-1					1	3	2006-173
VGB-87-2					2	3	2006-273
VGB-47-0	47	1.005 1.01-1.09 1.1-1.9 1-24 25-100	- 0.01 0.1 1 25	1 9 9 24 4	0	2.4	2006-074
VGB-47-1					1	2.4	2006-174
VGB-47-2					2	2.4	2006-274
VGB-38-0	38	1.005 1.01-1.09 1.1-1.9 1-9 10-100	- 0.01 0.1 1 10	1 9 9 9 10	0	2.5	2006-075
VGB-38-1					1	2.5	2006-175
VGB-38-2					2	2.5	2006-275

CARBIDE METRIC GAUGE BLOCKS

ORDER NO.	Total blocks	Nominal dimension	Steps	No. of blocks	Grade	Weight (kgs)	CODE NO.
VGB-112T-0	112	1.0005 1.001-1.009 1.01-1.49 0.5-24.5 25-100	- 0.001 0.01 0.05 25	1 9 49 49 4	0	5.8	2006-080
VGB-112T-1					1	5.8	2006-180
VGB-112T-2					2	5.8	2006-280
VGB-103T-0	103	1.005 1.01-1.49 0.5-24.5 25-100	- 0.01 0.5 25	1 49 49 4	0	5.6	2006-081
VGB-103T-1					1	5.7	2006-181
VGB-103T-2					2	5.7	2006-281
VGB-87T-0	87	1.001-1.009 1.01-1.49 0.5-9.5 10-100	0.001 0.01 0.5 10	9 49 19 10	0	4.8	2006-082
VGB-87T-1					1	4.9	2006-182
VGB-87T-2					2	4.8	2006-282
VGB-47T-0	47	1.005 1.01-1.09 1.1-1.9 1-24 25-100	- 0.01 0.1 1 25	1 9 9 24 4	0	4.6	2006-083
VGB-47T-1					1	4.6	2006-183
VGB-47T-2					2	4.6	2006-283

Ceramic Gauge Blocks

VERTEX

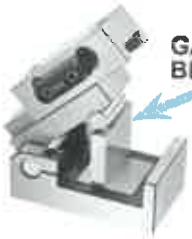

CHOICE DIFFERENT SIZE GAUGE BLOCK FOR TOTAL THE HEIGHT

Gauge blocks are fundamental standards for linear measurement. For adjusting, checking. or inspecting measuring instruments and tools, and precision workpieces.
Gauge blocks are used either individually or in combination of several blocks which are wrung together.

JIS/ISO/DIN ACCURACY STANDARD

SIZE OVER UP TO	ACCURACY AT 20°C (μm) GRADE 00	GRADE 0
10mm	±0.06	±0.12
10 - 25mm	+0.07	±0.14
25 - 50mm	±0.10	±0.20
50 - 75mm	±0.12	±0.25
75 - 100mm	±0.14	±0.30
100 - 150mm	-	±0.40

SIZE OVER UP TO	ACCURACY AT 20°C (μm) GRADE 1	GRADE 2
10mm	±0.20	±0.45
10 - 25mm	±0.30	±0.60
25 - 50mm	±0.40	±0.80
50 - 75mm	±0.50	±1.00
75 - 100mm	±0.60	±1.20
100 - 150mm	±0.80	±1.60

CERAMIC GAUGE BLOCKS

ORDER NO.	Total blocks	Nominal dimension	Steps	No. of blocks	Grade	Weight (kgs)	CODE NO.
VGB-112C-0	112	1.0005 1.001-1.009 1.01-1.49 0.5-24.5 25-100	- 0.001 0.01 0.05 25	1 9 49 49 4	0	3.7	2006-090
VGB-112C-1					1	3.7	2006-190
VGB-103C-0	103	1.005 1.01-1.49 0.5-24.5 25-100	- 0.01 0.5 25	1 49 49 4	0	3.6	2006-091
VGB-103C-1					1	3.6	2006-191
VGB-87C-0	87	1.001-1.009 1.01-1.49 0.5-9.5 10-100	0.001 0.01 0.5 10	9 49 19 10	0	3	2006-092
VGB-87C-1					1	3	2006-192
VGB-47C-0	47	1.005 1.01-1.09 1.1-1.9 1-24 25-100	- 0.01 0.1 1 25	1 9 9 24 4	0	2.4	2006-093
VGB-47C-1					1	2.4	2006-193

HOW TO CHOICE THE BLOCK FOR SINE BAR

DISTANCE / GAUGE BLOCK HEIGHT / CAN GET DEGREE	SIN BAR CENTER (50)	SIN BAR CENTER (100)
2°	1.7405	3.4899
3°	2.6168	5.2336
4°	3.4878	6.9756
5°	4.3578	8.7155
6°	5.2264	10.4528
7°	6.0935	12.1869
8°	6.9587	13.9173
9°	7.8217	15.6434
10°	8.6824	17.3648
11°	9.5404	19.0809
12°	10.3956	20.7911
13°	11.2476	22.4951
14°	12.0961	24.1921
15°	12.9401	25.8819
16°	13.7819	27.5637
17°	14.6186	29.2371
18°	15.4058	30.9017
19°	16.2784	32.5586
20°	17.1010	34.2020
21°	17.9184	35.8367
22°	18.7303	37.4606
23°	19.5366	39.0713
24°	20.3368	40.6736
25°	21.1309	42.2618
26°	21.9186	43.8371
27°	22.6995	45.3990
28°	23.4736	46.9471
29°	24.2405	48.4809
30°	25.0000	50.0000
31°	25.7519	51.5038
32°	26.4960	52.9919
33°	27.2320	54.4639
34°	27.9596	55.9192
35°	28.6788	57.3576
36°	29.3893	58.7785
37°	30.0908	60.1815
38°	30.7831	61.5661
39°	31.4660	62.9320
40°	32.1394	64.2787
41°	32.8030	65.6059
42°	33.4565	66.9130
43°	34.0999	68.1998
44°	34.7329	69.4658
45°	35.3553	70.7106

Cast Iron Surface Plates

- These surface plates are designed for a diversity of applications where a smooth surface is needed.
- Rigidity and lasting accuracy are ensured by adequate top and side thickness and ribbed construcntion.
- The surfaces are free from pinholes.
  Precisely finished by planing and hand scraping, suitable for various kinds of high precision work, inspection and countless other uses.

Surface Plates

Unit:mm

ORDER NO.	SIZE	SURFACE ACCURACY	APPROX. WEIGHT	CODE NO.
	mm	mm	kgs	
VS-01	200x200x50	0.005/100	7.1	2021-001
VS-02	250x250x50		11.1	2021-002
VS-03	250x300x50		10.9	2021-003
VS-04	300x300x50		12.6	2021-004
VS-05	300x400x60	0.006/100	20.1	2021-005
VS-06	300x450x65		24	2021-006
VS-07	450x450x80		50.5	2021-007
VS-08	500x500x75		56	2021-008
VS-09	450x600x100		64.5	2021-009
VS-10	600x600x100		78	2021-010
VS-11	600x900x110	0.007/100	117	2021-011
VS-12	900x900x130		220	2021-012
VS-13	900x1200x155		305	2021-013

NEW

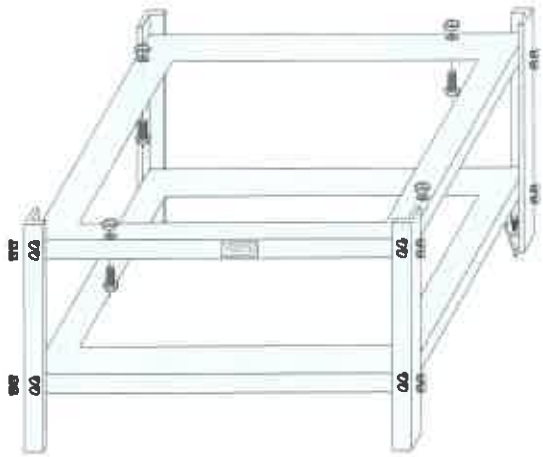

Separated Modular
Design DIY Type.
Low Profile Packing
With Adjustment Screw For Leveling

Cast Iron Surface Plates Stand

ORDER NO.	STAND SIZE	KGS	CODE NO.
	mm		
VSD-09N	450x600x700	25.6	2021-009N
VSD-10N	600x600x700	28.2	2021-010N
VSD-11N	600x900x700	47.8	2021-011N
VSD-12N	900x900x700	54.3	2021-012N
VSD-13N	900x1200x600	70.0	2021-013N

Black Granite Surface Plates

VERTEX®

- Black Granite Surface Plates meet or exceed JIS B7513/ISO-8512-2 Federal Specification GGG-P-463c.
- Harder then steel.
- Does not nick or burr.
- Retains accuracy for years.
- Auto-collimator checked for overall accuracy.
- Guaranteed repeat reading.
  Includes an inspection certificate to show the unilateral accuracy of plate.
- Does not rust or corrode.
- Surface Accuracy : 0.013~0.0065 / 100 mm

Accuracy and O-Ledge Style available only in toolroom Grade A

Surface Plates

Unit:mm

ORDER NO.	SIZE	SURFACE ACCURACY	APPROX. WEIGHT	CODE NO.
	mm	mm	kgs	
VSG-04	250x300x52	0.0065	12.6	2021-019
VSG-05	300x300x60	0.0065	17	2021-020
VSG-06	300x450x60	0.0065	25	2021-021
VSG-07	450x450x75	0.0065	46	2021-022
VSG-09	450x600x100	0.007	82	2021-023
VSG-10	600x600x100	0.009	109	2021-024
VSG-11	600x900x110	0.009	185	2021-025
VSG-13	900x1200x135	0.012	440	2021-027
VSG-14	1000x1000x135	0.012	408	2021-028
VSG-15	1000x1500x200	0.013	910	2021-029
VSG-21	900x900x160	0.013	380	2021-032

NEW

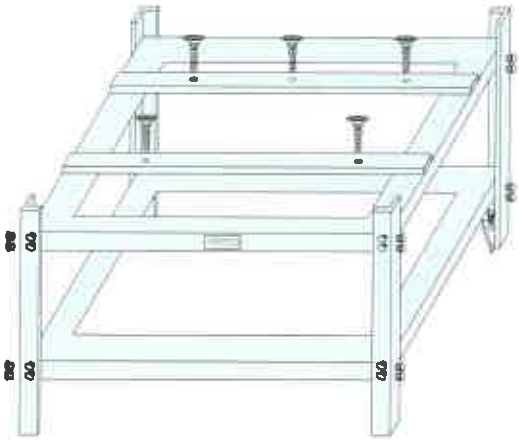

Strong & Rigid

Separated Modular Design DIY Type.
Low Profile Packing
With Adjustment Screw For Leveling
Material : SS41

Black Granite Surface Plates Stand

ORDER NO.	STAND SIZE	KGS	CODE NO.
	mm		
VSGD-09N	450x600x700	32.6	2021-023N
VSGD-10N	600x600x700	37.7	2021-024N
VSGD-11N	600x900x700	55.7	2021-025N
VSGD-13N	900x1200x700	72.2	2021-027N
VSGD-14N	1000x1000x700	74.0	2021-028N
VSGD-15N	1000x1500x700	86.4	2021-029N
VSGD-21N	900x900x600	73.0	2021-032N

Granite Square Rulers

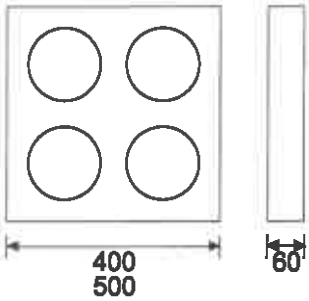

Accuracy:
SQUARENESS 0.002 / 100 mm

Unit: mm

ORDER NO.	SIZE	G.W.(kgs)	CODE NO.
VQR-400	400x400x60	24.8	2021-050
VQR-500	500x500x60	40.2	2021-051

Granite Straight Rulers

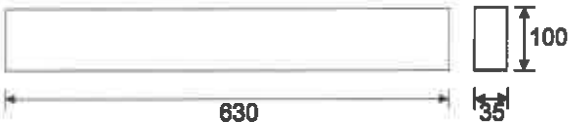

Accuracy:
PARALLELISM 0.002 / 100 mm

Unit: mm

ORDER NO.	SIZE	G.W.(kgs)	CODE NO.
VSR-630	630x100x35	8.7	2021-060
VSR-1000	1000x80x50	13.7	2021-061

Granite Triangle Ruler

Accuracy:
SQUARENESS 0.002 / 100 mm

mm

ORDER NO.	Size	Thickness	Weight (kgs)	CODE NO.
VGT-300	300x200	30	5.7	2022-020
VGT-400	400x250	30	8.4	2022-021
VGT-600	600x400	63	27.5	2022-022

Granite V-Block

PAIR

Accuracy:
PARALLELISM 0.005 / 100 mm

mm

ORDER NO.	CAPACITY	Size	GRADE	KGS	CODE NO.
VGV-63	Ø10~50	63x63x63	0	1.7	2022-030
VGV-100	Ø50~80	100x100x100	0	6.3	2022-031

Horizontal Leveling Instrument

0.02 / 100 mm

- When the bubble is in the center & touch and with in 2 red line, then the surface is leveled.

mm

ORDER NO.	DIMENSION	Weight (kgs)	CODE NO.
VLI-200A	200x46x46	1.96	2022-043
VLI-300A	300x46x45.90	2.78	2022-044

Precision Square Level

0.02 / 100 mm

- When the bubble is in the center & touch and with in 2 red line, then the surface is leveled.

mm

ORDER NO.	DIMENSION	Weight (kgs)	CODE NO.
VSL-200A	200x200x39.5	4.10	2022-053
VSL-300A	300x300x44.6	8.83	2022-054

Granite Surface Stand

VERTEX

VH-41,42,43

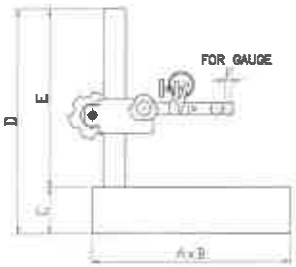

VH-45,46,47

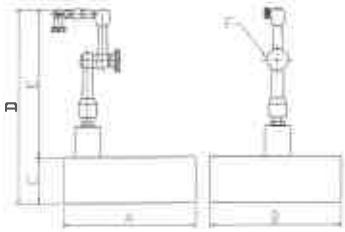

- THE DIAL GAUGE IS OPTIONAL
- ACCURACY: 0.005/100mm

※ Guage not included

ORDER NO.	AxB GRANITE PLATE DIEMENSION	C	D	E	F	WEIGHT (kgs)	CODE NO.
VH-41	6" x 9" 150x220 mm	52	252	200	8 mm	6	2022-001A
VH-42	6" x 9" 150x220 mm	52	252	200	8 mm	9	2022-002A
VH-43	9" x 12" 230x300 mm	90	290	200	8 mm	22	2022-003A
VH-45	6" x 9" 150x220 mm	52	185	133	8 mm	6	2022-005
VH-46	6" x 9" 150x220 mm	52	185	133	8 mm	7.9	2022-006
VH-47	9" x 12" 230x300 mm	90	223	133	8 mm	19.1	2022-007

Tester Arm Base

FOR SURFACE PLATE

NEW

※ Gauge not icluded

For smooth moving on granite / cast iron test surface plate.

- Measuring aid
- Equipped with flexible arm
- For smooth measuring on granite / cast iron surface platel
- Without dial gauge
- Base fine adjustment
- Bottom high precision finish : 0.02mm tolerance
- Material : Steel
- Single-hand operation
- Great for side measuring
- Reliable 1 knob locking mechanism

2-STEP ROUND SHAPE BASES IS EASY TO MOVE WITH 1 HAND.

EXAMPLE

※ WITHOUT DIAL GUAGE

mm

ORDER NO.	BASE (Ø)	MAIN ROD O.D x L	SUB ROD O.L x L	WEIGHT (kgs)	CODE NO.
VTB-120	120	Ø25 x 125	Ø25 x 125	2.65	2022-015

Cleaning Paper

ORDER NO. P-1000(PAPER)
CODE NO.2021-200

SIZE: WIDTH: 240 MM (±1CM)
LENGTH: 350 M, G.W. 11 kgs
PACK: 2 ROLL/CARTON
COLOR: WHITE

ORDER NO. S-1000(STAND)
CODE NO.2021-220

450L x 330W x 800H
G.W. 2.7 kgs

Concentric Test Stand

NEW

- For work shop use only

VCI-400

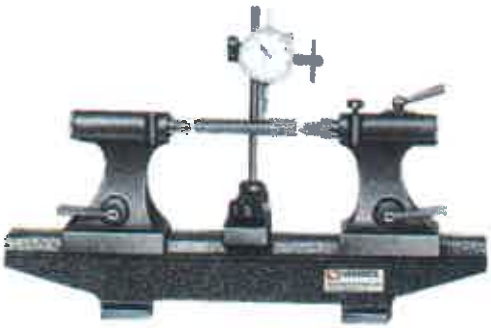

VCI-200

mm

ORDER NO.	LENGTH	WIDTH	HEIGHT	CENTER DISTANCE	CENTER HEIGHT	WEIGHT (kgs)	CODE NO.
VCI-200	490	90	100	200	145	22	2021-101
VCI-300	530	90	100	300	145	26.8	2021-105
VCI-400	650	90	100	400	145	29.6	2021-102
VCI-600	1000	200	230	600	200	138.5	2021-106

Pin Gauge

EACH 0.01mm FOR ONE STEP SIZE

ORDER NO.	NOMINAL DIMENSION EACH 0.01mm FOR 1 PCS	PCS/ SET	WEIGHT (kgs)	CODE NO.
VPG-0B	0.50, 0.51, 0.52~1.00	51	1	2022-060
VPG-1A	1.00, 1.01, 1.02~1.50	51	1	2022-061
VPG-1B	1.50, 1.51, 1.52~2.00	51	1	2022-062
VPG-2A	2.00, 2.01, 2.02~2.50	51	1	2022-063
VPG-2B	2.50, 2.51, 2.52~3.00	51	1	2022-064
VPG-3A	3.00, 3.01, 3.02~3.50	51	1	2022-065
VPG-3B	3.50, 3.51, 3.52~4.00	51	1	2022-066
VPG-4A	4.00, 4.01, 4.02~4.50	51	1.5	2022-067
VPG-4B	4.50, 4.51, 4.52~5.00	51	1.5	2022-068
VPG-5A	5.00, 5.01, 5.02~5.50	51	1.5	2022-069
VPG-5B	5.50, 5.51, 5.52~6.00	51	1.5	2022-070
VPG-6A	6.00, 6.01, 6.02~6.50	51	3.1	2022-071
VPG-6B	6.50, 6.51, 6.52~7.00	51	3.2	2022-072
VPG-7A	7.00, 7.01, 7.02~7.50	51	3.5	2022-073
VPG-7B	7.50, 7.51, 7.52~8.00	51	3.5	2022-074
VPG-8A	8.00, 8.01, 8.02~8.50	51	3.8	2022-075
VPG-8B	8.50, 8.51, 8.52~9.00	51	3.8	2022-076
VPG-9A	9.00, 9.01, 9.02~9.50	51	4	2022-077
VPG-9B	9.50, 9.51, 9.52~10.00	51	4	2022-078
VPG-10A	10.00, 10.01, 10.02~10.50	51	5	2022-079
VPG-10B	10.50, 10.51, 10.52~11.00	51	5	2022-080

FEATURES:

DIAMETER	EACH STEP SIZE	LENGTH	ACCURACY IN DIAMETER	ROUNDNESS TOLERENCE	HARDNESS
0.05~0.09	0.01	5~10	±0.5um	0.5um	HV480
0.10~0.19	0.01	20	±0.5um	0.5um	HV480
0.20~0.99	0.01	40	±1um	0.8um	HV650
1.00~10.00	0.01	50	±1um	0.8um	HV650
10.01~20.00	0.01	50	±1.5um	1.6um	HV650
20.00~30.00	0.01	50	±1.5um	1.6um	HV650

Measuring Instrument

VERTEX®

PRECISION VERNIER CALIPER

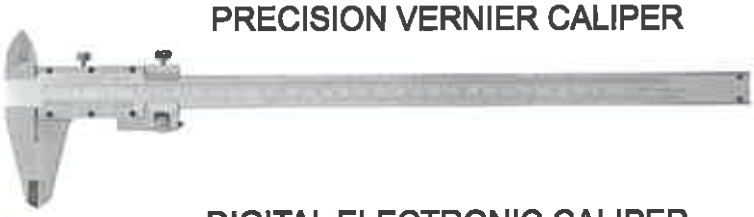

L: 150, 200, 300 mm

ORDER NO.	1 SCALE	WEIGHT(kg)	CODE NO.
VVC-6"	0.02 mm 1/1000"	0.4	2023-001
VVC-8"		0.5	2023-002
VVC-12"		0.8	2023-003

DIGITAL ELECTRONIC CALIPER

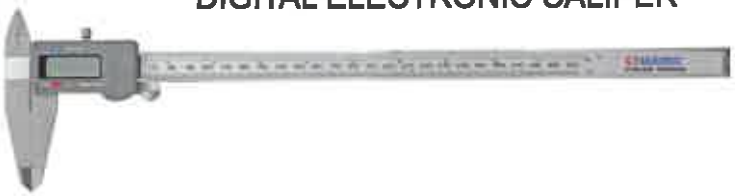

L: 150, 200, 300 mm

ORDER NO.	1 SCALE	WEIGHT(kg)	CODE NO.
VEC-6"	0.01 mm	0.4	2023-010
VEC-8"		0.5	2023-011
VEC-12"		0.8	2023-012

DIAL CALIPER

L: 150, 200, 300 mm

ORDER NO.	1 SCALE	WEIGHT(kg)	CODE NO.
VDC-6	0.02 mm	0.4	2023-050
VDC-8		0.5	2023-051
VDC-12		0.9	2023-052

OUTSIDE MICROMETER

0 - 25 mm
25 - 50 mm
50 - 75 mm
75 - 100 mm
100-125 mm

INSIDE MICROMETER

5 - 30 mm
25 - 50 mm
50 - 75 mm
75 - 100 mm
100-125 mm

ORDER NO.	1 SCALE	WEIGHT(kg)	CODE NO.
VOM-0025	0.01 mm	0.3	2023-060
VOM-2550		0.4	2023-061
VOM-5075		0.5	2023-062
VOM-75100		0.6	2023-063

ORDER NO.	1 SCALE	WEIGHT(kg)	CODE NO.
VIM-0530	0.01 mm	0.3	2023-065
VIM-2550		0.4	2023-066
VIM-5075		0.4	2023-067
VIM-75100		0.4	2023-068
VIM-100125		0.42	2023-069

Measuring Instrument

MICROMETER STAND

MAX.OPENED
17mm

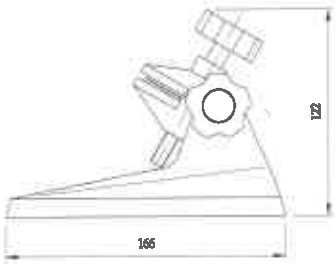

166x110x122 mm

ORDER NO.	WEIGHT(kg)	CODE NO.
VH-19	1.3	2023-090

Measuring Instrument

VERTEX®

DIAL INDICATOR

0.01~10 mm

ORDER NO.	1 SCALE	WEIGHT(kg)	CODE NO.
VDI-1	0.01 mm	0.3	2023-020

DIAL TEST INDICATOR

NIDDLE TYPE

0.01~0.8 mm

ORDER NO.	1 SCALE	WEIGHT(kg)	CODE NO.
VDI-0.8A	0.01 mm	0.2	2023-070

HEIGHT VERNIER CALIPER

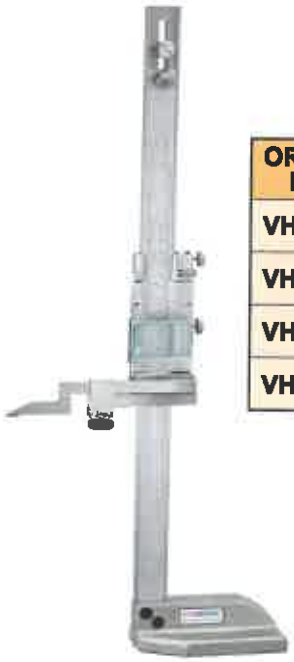

H: 300 600 450 500

ORDER NO	1 SCALE	WEIGHT (kgs)	CODE NO.
VHG-12	0.02 mm	4	2023-034
VHG-18		11.9	2023-035
VHG-20		10.7	2023-036
VHG-24		11.8	2023-037

HEIGHT DIAL CALIPER

H: 300 600 mm

ORDER NO.	1 SCALE	WEIGHT (kgs)	CODE NO.
VHD-12	0.01 mm	4	2023-080
VHD-24		9.4	2023-081

Measuring Instrument

MICROMETER HEAD

ORDER NO.	SCALE x L	WEIGHT(kg)	CODE NO.
VMH-25	0.01x25 mm	0.2	2023-040

Measuring Tool Kits

NEW

ORDER NO.	SET INCLUDING	WEIGHT (kg)	CODE NO.
VVC-20	VVC-6 x 1 PCS VOM-0025 x 1 PCS VIM-0530 x 1 PCS	1.37	2023-009

Angle Level

VERTEX®

Oil Type Protractor With Magnets

VAL-60

VAL-50

VAL-30

VAL-10

VAL-20

ORDER NO.	LxWxH	BASE	ACU	WEIGHT (kg)	CODE NO.
VAL-10	78x62x14mm	ABS	0.2°	0.2	2033-100
VAL-30	93x79x15mm	ABS	0.1°	0.2	2033-101
VAL-50	93x79x16mm	METAL	0.083°	0.4	2033-102
VAL-60	140x130x20mm	METAL	0.05°	1	2033-103
VAL-20	70x65x30mm	ABS	0.2°	0.2	2033-104
	13mm/1/2"x3M/10'				

- The pointer is rotating in a hydraulic oil for stable, precise and error-eliminating reading, even to a differential subgraduation less than one degree. The two pointers or the vernier versus the annular graduations are read supper imposedly with minimum reading error.
- Double annular graduations are provided for preventing wisual reading error.
- The transparent temperature-resistant oil may visually amplify the pointer for a better optical reading.
- The double-rail magnet may attract this angle level on a round pipe or a surface of ferrous material.
- An extension rule could be inserted into the bottom slot for measurement and drawing line for wider area.

1. RESET: For setting a pseude-horizon, upon which a new angle on the pseudo-horizon can be directly measured.
2. DOUBLE CHECK: Double annular grduations provided for calibrating either positive or negative degrees.

MULTI-FUNCTION ANGLE LEVEL

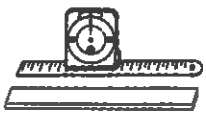

A Thin iron plate (The magnet power the thicker the weaker) may be attracted under the angle level for wider measurement.

Inserting a straight extension rule into a bottom slot if the angle level.

Attracting the angle level on an iron plate for measuring an angle inside a tank.

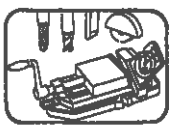

1. Suitable for working machines

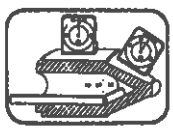

2. Grinding machine

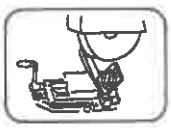

3. Out & inner cone angle

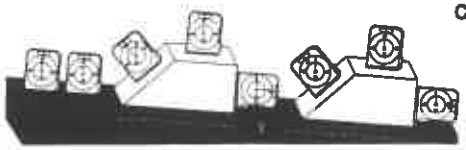

A standard angle block laid on a Non-horizontal Plane showing several measured positions by this angle level.

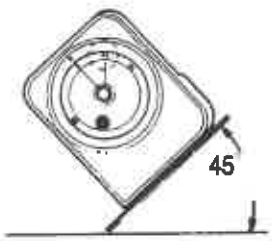

Finding an angle

Align the movable degree scale 0° reading, in line with the fixed vernier, 0° mark. Set your instrument's bottom surface on the object to be measured. Your reading off the pointer is your angle of inclination from 0°

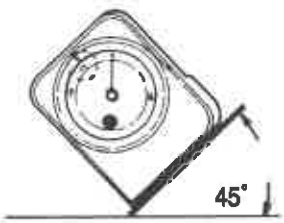

OVERLAP

Setting Specific angles

Align the desired angle on the movable scale to the vernier 0° mark.
Tilt the instrument until the pointer is aligned with the 0° mark.

Hardness Tester

ORDER NO.VHT-260 CODE NO.2033-201

NEW

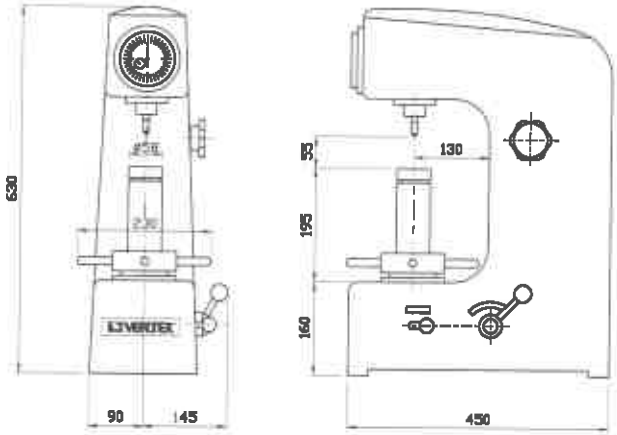

- Swing 260mm
- Workpiece max. height : 170mm
- L x W x H : 466 x 238 x 630 mm
- Weight : 86.2 kgs
- 3 pressure degree : 60, 100, 150 kgs
  Rockwell scale : HRA>70
  HRB 30 - 100
  HRC 20 - 67

ACCESSORIES :

- Diamond tester x 1
- Steel ball tester x 1
- Flat testing table x 2
- Prisma testing table x 1
- Rockwell standard manual x 1

Stainless Steel Ruler

NEW

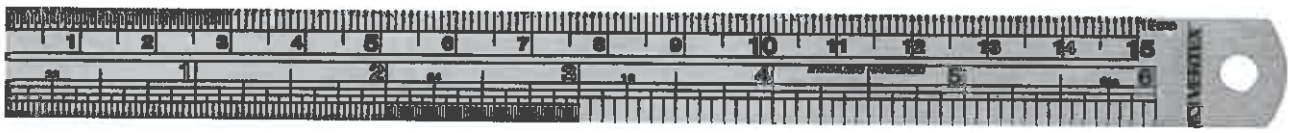

- Scale : acid - etched,engraved
- Surface treatment : polished finishing.

ORDER NO.	SIZE	DIMENSION(mm)	N.W.(kg)	CODE NO.
VSR-150	6"/15 cm	170x14.7x0.6	0.015	2033-321
VSR-200	8"/20 cm	226x20.0x0.6	0.03	2033-322
VSR-300	12"/30 cm	334x23.7x1.0	0.06	2033-323

Thread Size & Depth Gauge

VERTEX

HANDY TYPE

NEW

GO NO GO

- INSTANT RESULT, QUICK READING
- THREAD PLUG GAUGE CHECK SIZE BY GO / ØD mm STD ACTION & THREAD DEPTH.
- RING GAUGE TO SET O POINT BEFORE USE
- 1 MARK : 0.2 mm,M3 x 0.5-6H H IS GRADE.
- ALLOW TO PRESET THE DESIRED THREAD DEPTH

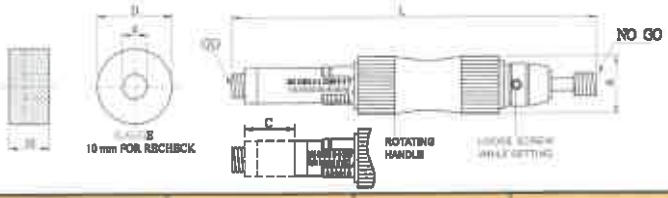

ORDER NO.	SPECIFICATION					C MEASURING Depth(mm)	WEIGHT (kg)	CODE NO.
	A	B	L	D	d			
VSD-M3	M3x0.5-6H	17	102	Ø30	Ø3.3	8	0.12	2022-400
VSD-M4	M4x0.7-6H	17	102	Ø30	Ø4.3	8	0.12	2022-401
VSD-M5	M5x0.8-6H	17	114	Ø30	Ø5.5	20	0.14	2022-402
VSD-M6	M6x1-6H	17	114	Ø30	Ø6.5	20	0.14	2022-403
VSD-M8	M8x1.25-6H	23	140	Ø30	Ø10	26	0.2	2022-404
VSD-M10	M10x1.5-6H	23	140	Ø30	Ø10.5	26	0.2	2022-405

Plug Gauge

NEW

GO NO GO

The metric thread plug gauge & ring gauge

- Plug Gauge conform to DIN13 / DIN2280.

The Metric Thread Plug Gauge In Coarse Thread

Unit : mm

ORDER NO.	Size (mm)	Weight (kg)	CODE NO.
VPG-3M	M3 x 0.5P	0.03	2033-340
VPG-4M	M4 x 0.7P	0.03	2033-341
VPG-5M	M5 x 0.8P	0.03	2033-342
VPG-6M	M6 x 1.0P	0.04	2033-343
VPG-8M	M8 x 1.25P	0.07	2033-344
VPG-10M	M10 x 1.5P	0.07	2033-345
VPG-12M	M12 x 1.75P	0.11	2033-346
VPG-14M	M14 x 2.0P	0.12	2033-347
VPG-16M	M16 x 2.0P	0.12	2033-348

ORDER NO.	Size (mm)	Weight (kg)	CODE NO.
VPG-18M	M18 x 2.5P	0.19	2033-349
VPG-20M	M20 x 2.5P	0.24	2033-350
VPG-22M	M22 x 2.5P	0.24	2033-351
VPG-24M	M24 x 3.0P	0.28	2033-352
VPG-27M	M27 x 3.0P	0.34	2033-353
VPG-30M	M30 x 3.5P	0.40	2033-354
VPG-33M	M33 x 3.5P	0.66	2033-355
VPG-36M	M36 x 4.0P	0.71	2033-356

Ring Gauge

GO TYPE

NEW

The metric thread plug gauge & ring gauge

- Ring Gauge conform to DIN13 / DIN2285.

Standard Size
The Metric Thread Ring Gauge In Coarse Thread

Unit : mm

ORDER NO.	Size (mm)	Weight (kg)	CODE NO.
VRG-3	M3 x 0.5P	0.04	2033-370
VRG-4	M4 x 0.7P	0.04	2033-371
VRG-5	M5 x 0.8P	0.04	2033-372
VRG-6	M6 x 1.0P	0.07	2033-373
VRG-8	M8 x 1.25P	0.08	2033-374
VRG-10	M10 x 1.5P	0.09	2033-375
VRG-12	M12 x 1.75P	0.15	2033-376
VRG-14	M14 x 2.0P	0.15	2033-377
VRG-16	M16 x 2.0P	0.20	2033-378
VRG-18	M18 x 2.5P	0.24	2033-379
VRG-20	M20 x 2.5P	0.24	2033-380
VRG-22	M22 x 2.5P	0.42	2033-381
VRG-24	M24 x 3.0P	0.42	2033-382
VRG-27	M27 x 3.0P	0.51	2033-383
VRG-30	M30 x 3.5P	0.56	2033-384
VRG-33	M33 x 3.5P	0.72	2033-385
VRG-36	M36 x 4.0P	0.78	2033-386